D.O.O. "VODOVOD I KANALIZACIJA"

Broj 03-2984

Danilovgrad, 26.09 2018 god.

CONTRACT AGREEMENT

THIS CONTRACT AGREEMENT is made on the 26 day of SEPTEMBER **2018**.

BETWEEN

(1) *D.O.O. "Vodovod i kanalizacija" Danilovgrad,* Limited liability company founded by Municipality of Danilovgrad, having its principal place of business at *Caja Scepanovica bb Danilovgrad, 81410 State of Montenegro* (hereinafter called "the Employer"),

and

(2) *STRABAG AG AUSTRIA, a corporation incorporated under the laws of Austria* and having its principal place of business at *Ortenburgerstrasse 27, 9800 Spittal an der Drau, Austria* (hereinafter called "the Contractor").

WHEREAS the Employer invited tenders for the execution of the Works, described as - *Reconstruction of existing and construction of new sewers* and has accepted a Tender by the Contractor for the execution and completion of these Works and the remedying of any defects therein, and the Employer agrees to pay the Contractor the Contract Price or such other sum as may become payable under the provisions of the Contract at the times and in the manner prescribed by the Contract.

The Employer and the Contractor agree as follows:

1. In this Agreement words and expressions shall have the same meanings as are respectively assigned to them in the Contract documents referred to.

2. The following documents shall be deemed to form and be read and construed as part of this Agreement. This Agreement shall prevail over all other Contract documents.

(a) the Letter of Acceptance
(b) the Tender
(c) the Addenda No's 1, 2 and 3
(d) the Particular Conditions
(e) the General Conditions
(f) the Specification
(g) the Drawings; and
(h) the completed Schedules,

3. In consideration of the payments to be made by the Employer to the Contractor as indicated in this Agreement, the Contractor hereby covenants with the Employer to execute the Works and to remedy defects therein in conformity in all respects with the provisions of the Contract.

4. The Employer hereby covenants to pay the Contractor in consideration of the execution and completion of the Works and the remedying of defects therein, the Contract Price or such other sum as may become payable under the provisions of the Contract at the times and in the manner prescribed by the Contract.

Agreement to be executed in accordance with the laws of State of Montenegro on the day, month and year indicated above.

Signed by: Zapad Đuričković

For and on behalf of the Employer in the presence of
Darko Đuričković, Executive Director

Witness:
Name: Zoran Dragović
Address: ul. Caja Šćepanovića bb
Date: 26.09.2018, Danilovgrad

Signed by: pp

for and on behalf the Contractor in the presence of
Günther Hartweger, Authorised representative
Erwin Wurzer, Authorised representative

STRABAG AG
Ortenburgerstr. 27, 9800 Spittal/Drau

Witness:
Name: Željko Leković
Address: Ul.Zetskih vladara 5, Podgorica
Date: 26.9.2018

DOO „VODOVOD I KANALIZACIJA"
DANILOVGRAD
03-2750
Danilovgrad, 07.09.2018. godine

81410 Danilovgrad, Jefta – Čaja Šćepanovića bb *e-mail: jkzpdanilovgrad@t-com.me*
Tel/fax: 020/811-550

LETTER OF ACCEPTANCE

TO: STRABAG AG AUSTRIA

Ortenburgerstrasse 27, A-9800 Spittal an der Drau, Austria

This is to notify you that your tender dated 15.05.2018 for the execution of the "Reconstruction of existing and construction of new sewers" for the Contract Price of **2.749.417,28 (two million seven hundred forty nine thousand four hundred seventeen euros and twenty eight cents)** EURO, or equivalent thereof, as corrected and modified in accordance with the Instructions to Tenderers, is hereby accepted by our Company.

You are hereby required:

(a) to submit the Performance Security according to Instruction to Tenderers para 43.1 and Particular Conditions of Contract article 4.2 in the form provided in Volume II.iv of the tender documents.

(b) sign the attached Contract Agreement and return according to Instruction to Tenderers para 42.2 ; and

(c) to commence performance of the said contract in accordance with the Contract Documents.

Authorised Signature.....

Name and Title of Signatory: Darko Djurickovic, Executive Director

Name of Company: DOO "Vodovod i kanalizacija" Danilovgrad

Attachment: Contract Document

MONTENEGRO - CRNA GORA

DANILOVGRAD MUNICIPAL INFRASTRUCTURE PROJECT

TENDER DOCUMENT FOR PROCUREMENT

PROCUREMENT OF:

REHABILITATION OF EXISTING AND CONSTRUCTION OF NEW SEWERS

ДАНИЛОВГРАД

OPSTINA DANILOVGRAD

PROCON

National Project Implementation Unit in the field of Communal Services and Environment

VHS BRNO

15 JUNE 2017

D.O.O. VODOVOD I KANALIZACIJA VIK DANILOVGRAD

001 / 636

STRABAG
STRABAG AG

Tender Document for

Procurement

Procurement of:

REHABILITATION OF EXISTING AND CONSTRUCTION OF NEW SEWERS

Issued on: 15 JUNE 2017

Tender No: EBRD ME DAN 9000

Employer: D.O.O. "Vodovod i kanalizacija" Danilovgrad

Country: State of Montenegro

D.O.O. VODOVOD I KANALIZACIJA VIK

002

STRABAG
STRABAG AG

TABLE OF CONTENTS

Volume I	**The Tender**	
	Two Stage Tender	**3**
	Invitation for Tenders	4
I.i	Instruction to Tenderers	7
I.ii	Tender Data	32
I.iii	Tender Form - Two Stage Tender - First Stage Tender	38
I.iv	Tender Form - Two Stage Tender - Second Stage Tender	41
I.v	Tender Security Form	43
I.vi	Manufacturer's Authorisation Form	45
I.vii	Letter of Acceptance	46
I.viii	**Price Schedules** (for use with both Single and Two Stage Tenders)	48
I.ix	Schedule of Supplementary Information	65
Volume II	**The Contract**	**95**
II.i	General Conditions of Contract	96
II.ii	Particular Conditions of Contract	97
	Appendix to Tender	132
II.iii	Contract Agreement	136
	Appendices	
	1 Terms and Procedures of Payment	138
	2 Price Adjustment	139
	3 Insurance Requirements	141
	4 Time Schedule	143
	5 List of Subcontractors	144
	6 Scope of Works and Supply by the Employer	145
	7 List of Documents for Approval or Review	146
	8 Operation and Maintenance Manuals	147
II.iv	Performance Security	148
II.v	Advance Payment Security	149
Volume III	**The Requirements**	**150**
III.i	Specifications	151
III.ii	Drawings	152

STANDARD TENDER DOCUMENTS

Rehabilitation of existing and construction of new sewers

Volume I

The Tender
(Two Stage)

VHS Brno, a.s.

STRABAG
STRABAG AG

INVITATION FOR TENDERS

State of Montenegro

Reconstruction of existing and construction of new sewers

This Invitation for Tenders follows the General Procurement Notice for this project which was published in *Procurement Opportunities*, on 30th March, 2012, updated on 1st May, 2013, on 13th May, 2014 and on 16th of January 2017.

D.O.O. "Vodovod i kanalizacija" Danilovgrad (the Employer), intends using part of the proceeds of a loan from the European Bank for Reconstruction and Development (the Bank) towards the cost for **Danilovgrad Municipal Infrastructure Project component - Reconstruction of existing and construction of new sewers.**

The Employer now invites sealed tenders from contractors for the following contracts to be funded from the proceeds of the loan:

Reconstruction of existing and construction of new sewers

General Description

The project concerns water investments and has one basic component:

- Reconstruction of existing and construction of new sewers.

The project includes design works and rehabilitation of existing faecal sewerage of Danilovgrad water supply system. The main objective of the project is to provide a sewerage system for the Danilovgrad agglomeration by constructing separate sanitary sewerage, especially in those town parts in which there is no existing sewerage, and by collecting wastewaters in the Danilovgrad WWTP.

The duration of required services and works will be as following:
Time for completion of works: **600 days**
Tests (including individual tests, complex tests): **7 days**
Project of maintenance of facility: **60 days**

The price including VAT will be calculated on the basis of currently applicable rate. VAT shall be paid in compliance with the Law on Add Value Tax (Zakon o porezu na dodatu vrijednost Sl. list RCG" No. 65/01, 12/02, 38/02, 72/02, 21/03 and 76/05, 04/06 and "Sl. list CG", No. 16/07, 73/10, 40/11, 29/13, 9/15, 53/16 and 01/17 and Rulebook on the Procedure of exemption from value added tax (Article 10).

Tendering for contracts to be financed with the proceeds of a loan from the Bank is open to firms from all countries. The proceeds of the Bank's loan will not be used for the purpose of any payment to persons or entities, or for any import of goods, if such payment or import is prohibited by a decision of the United Nations Security Council taken under Chapter VII of the Charter of the United Nations.

To be qualified for the award of a contract, tenderers must satisfy the following minimum criteria:

a) **Average annual turnover.** The Tenderer shall have an average annual construction turnover (defined as billing for works in progress and completed) over the last 3 **(three)** financial years of not less than **2,000,000.00 (two million) EURO** equivalent. In case of a JVCA all Partners combined shall have an average annual construction turnover (defined as billing for works in progress and completed) over the last 3 **(three)** financial years of not less than **2,000,000.00 (two million) EURO** equivalent.

b) **Financial resources.** The Tenderer shall demonstrate that it has access to, or has available, liquid assets, unencumbered real assets, lines of credit, and other financial means sufficient to meet the construction cash flow for the contract for a period of **4 (four)** months, estimated as not less than **500,000.00 (five hundred thousand) EURO** equivalent, taking into account the applicant's commitments for other contracts.

Total requested credit facilities must meet following criteria:
- for a Single Entity 500,000.00 EURO
- for JVCA
  - Partner of a JVCA min. 15%
  - Leading Partner of a JVCA min. 40%.

c) **Specific experience.** The Tenderer (in case of a JVCA all Partners combined) shall demonstrate that it has successful experience as prime contractor in the execution of at least **1 (one)** project of design and execution of construction of sewerage of a nature and complexity comparable to the proposed contract that have been successfully and substantially completed within the last **5 (five)** years prior to the tender submission deadline, each with a value of at least **1,500,000.00 (one million and five hundred thousand) EURO** (excluding VAT). The similarity shall be based on the physical size, complexity, methods/technology or other characteristics as described below.

Leading Partner of JVCA shall provide min. 40 % of Accepted Contract Amount, each Partner of JVCA min. 15 % of Accepted Contract Amount.

The Tenderer must demonstrate that works and supplies have been done directly by him in position of prime contractor or Leading Partner of JVCA.

Tender documents may be obtained from the office at the address below upon payment of a non-refundable fee of **150 EURO.**

Please make a payment to the following bank account number: ME25550035030000038053, JP "VODOVOD I KANALIZACIJA" with Societe General Banka Montenegro PDBPMEPG.

Upon receipt of appropriate evidence of payment of the non-refundable fee, the documents will promptly be dispatched; however, no liability can be accepted for their loss or late delivery.

A two-stage tender procedure will be adopted and will proceed as follows:

(a) the First Stage tender will consist of a technical proposal only, without any reference to prices, and a list of any deviations to the technical and commercial conditions set forth in the tender documents or any alternative technical solutions a tenderer wishes to offer, and a justification therefor, provided always that such deviations or alternative solutions do not change the basic objectives of the project. Following evaluation by the Employer of the First Stage tenders, the Employer will invite each tenderer who meets the qualification criteria and who has submitted a technically responsive tender to a clarification meeting. The proposals of all such tenderers will be reviewed at the meeting and all required amendments, additions, deletions and other adjustments will be noted and recorded in a Memorandum. Only qualified tenderers submitting a technically responsive and acceptable First Stage tender will be invited to submit a Second Stage tender.

(b) the Second Stage tender will consist of an updated technical tender incorporating all changes required by the Employer as recorded in the Memorandum to the clarification meeting or as necessary to reflect any amendments to the tender documents issued subsequent to submission of the First Stage tender; and the commercial tender.

First Stage tenders must be delivered to the address below on or before **15:00 on August 14th, 2017,** at which time they will be opened in the presence of the tenderers' representatives who wish to attend.

All Second Stage tenders must be accompanied by a Tender Security of **50,000.00 EURO** or its equivalent in a convertible currency, and must be delivered to the address below on or before the time and date of the submission deadline specified in the Letter of Invitation to submit Second Stage tenders, at which time they will be opened in the presence of the tenderers' representatives who wish to attend.

A register of potential tenderers who have purchased the tender documents may be inspected at the address below. Prospective tenderers may obtain further information from, and inspect and acquire the tender documents at, the following office:

Contact name: Mrs. Žana Perović
Employer: D.O.O. "Vodovod i kanalizacija" Danilovgrad
Address: Caja Scepanovica bb Danilovgrad
81410 State of Montenegro
Tel: +382 20 811 550
Email: jkzpdanilovgrad@t-com.me

VOLUME I.i

INSTRUCTIONS TO TENDERERS

	General	**9**
1.	Scope	9
2.	Source of funds	9
3.	Eligibility and qualification	9
4.	Cost of tendering	10
5.	Pre-tender meeting or site visit	10
	Tender documents	**10**
6.	Contents of tender documents	10
7.	Clarification of tender documents	11
8.	Amendment of tender documents	11
	Preparation of First Stage tenders	**12**
9.	Language of tender	12
10.	Documents comprising the tender	12
11.	Format and signing of tender	14
	Submission of First Stage tenders	**15**
12.	Sealing and marking of First Stage tenders	15
13.	Deadline for submission of First Stage tenders	15
14.	Late tenders	15
	First Stage tender opening and evaluation	**16**
15.	Opening of First Stage tenders by Employer	16
16.	Preliminary examination of First Stage tenders	16
17.	Evaluation of First Stage tender	16
18.	Qualification	16
	Clarification meeting	**17**
19.	Clarification of First Stage tenders and review of tenderers' proposed deviations and alternative solutions	17
20.	Invitation to submit Second Stage tenders	17

Preparation of Second Stage tenders 18

21. Documents comprising the Second Stage tender 18
22. Tender prices 19
23. Tender currencies 21
24. Tender validity period 22
25. Tender Security 22
26. Format and signing of tender 23

Submission of Second Stage tenders 24

27. Sealing and marking of Second Stage tenders 24
28. Deadline for submission of tenders 24
29. Late tenders 24
30. Modification and withdrawal of tenders 25

Second Stage tender opening and evaluation 25

31. Opening of Second Stage tenders by Employer 25
32. Contacting the Employer 26
33. Clarification of tenders 26
34. Preliminary examination of Second Stage tenders 26
35. Conversion to single currency 27
36. Technical evaluation of Second Stage tender 27
37. Commercial evaluation of Second Stage tender 28
38. Change in qualification status 28
39. Employer's right to accept any tender and to reject any or all tenders 29

Award of contract 29

40. Award criteria 29
41. Notification of award 29
42. Signing of contract 29
43. Performance Security 29
44. Alternative dispute resolution procedure 30
45. Prohibited Practices 30

VOLUME I.i

INSTRUCTIONS TO TENDERERS

General

1. Scope

1.1 The Employer, as defined in the Tender Data, invites tenders for the supply and installation of the Facilities outlined in the Schedule of Requirements and the Technical Specifications in accordance with the procedures, conditions and contract terms prescribed in these tender documents.

2. Source of funds

2.1 The Employer intends to use part of the proceeds of a loan from the European Bank for Reconstruction and Development (the Bank) for eligible payments under the contract for which this Invitation for Tenders is issued. Payment by the Bank will be made only at the request of the Employer and upon approval by the Bank, in accordance with the terms and conditions of the Loan Agreement, and will be subject in all respects to the terms and conditions of the Loan Agreement. The proceeds of the Bank's loan will not be used for the purpose of any payment to persons or entities, or for any import of goods, if such payment or import is prohibited by a decision of the United Nations Security Council taken under Chapter VII of the Charter of the United Nations.

3. Eligibility and qualification

3.1 Subject to paragraph 2.1 above, tenders are invited from tenderers from any country unless specified otherwise in the Tender Data.

3.2 To qualify for award of the contract, tenderers shall meet the qualifying criteria referred to in the Tender Data.

3.3 No affiliate of the Employer entity shall be eligible to tender or participate in a tender in any capacity whatsoever unless it can be demonstrated that there is not a significant degree of common ownership, influence or control between the Employer and the affiliate.

3.4 A firm, its affiliates or parent company which provides consulting services for a project cannot be a supplier of goods or works for such project, unless it can be demonstrated that there is not a significant degree of common ownership, influence or control between the firm supplying consulting services and the firm tendering for the supply of goods or works.

3.5 A tenderer may submit or participate in only one tender for each contract. Submission or participation by a tenderer in more than one tender for a contract (other than alternative tenders which have been permitted or requested) will result in the rejection

of all tenders for that contract in which the party is involved. However, the same subcontractor may be included in more than one tender.

3.6 A tender shall not be eligible to participate where it has been determined to have engaged in Prohibited Practices in accordance with sub-paragraph 45.1(d).[1]

4. Cost of tendering

4.1 The tenderer shall bear all costs associated with the preparation and submission of its tender, and the Employer will in no case be responsible or liable for these costs.

5. Pre-tender meeting or site visit

5.1 The tenderer is advised to attend any pre-tender meeting or site visit scheduled in the Tender Data.

5.2 The tenderer is advised to visit and examine the site and surroundings where the Facilities are to be installed and to obtain for itself on its own responsibility all information as may be necessary for preparing the tender and entering into a contract for supply and installation of the Facilities. The costs of visiting the site shall be at the tenderer's own expense.

5.3 The tenderer and any of its personnel or agents will be granted permission by the Employer to enter upon its premises and lands for the purpose of such inspection, but only upon the express condition that the tenderer, its personnel and agents will release and indemnify the Employer and its personnel and agents from and against all liability in respect thereof, and neither the Employer, its personnel or agents will be responsible for death or personal injury, loss of or damage to property and any other loss, damage, costs and expenses incurred as a result of the inspection.

Tender Documents

6. Contents of tender documents

6.1 The tender documents comprise the documents listed below, other documentation or drawings specified in the Tender Data and addenda issued in accordance with paragraph 8.

	Invitation for Tenders
Vol. I.i	Instructions to Tenderers
.ii	Tender Data
.iii	Tender Form
.iv	Price Schedules
.v	Tender Security Form
Vol.II.i	General Conditions of Contract

[1] Amended 2 May 2007

.ii	Special Conditions of Contract (- Works Procedures)
.iii	Contract Agreement Form (- Appendices)
.iv	Performance Security
.v	Advance Payment Security
Vol.III.i	Schedule of Requirements
.ii	Technical Specifications
.iii	Drawings and Other Documentation

6.2 The tenderer is expected to examine all instructions, forms, terms, specifications and other information outlined in the tender documents. Failure to furnish all information required by the tender documents or submission of a tender not substantially responsive to the tender documents in every respect will be at the tenderer's risk and may result in rejection of its tender.

7. Clarification of tender documents

7.1 A prospective tenderer requiring any clarification of the tender documents may notify the Employer in writing or by fax (hereinafter, "fax" includes cable and telex) at the Employer's mailing address indicated in the Tender Data. All requests for clarification must be received by the Employer no later than 28 days prior to the deadline for the submission of tenders. The Employer will respond in writing to all such requests for clarification. Copies of the Employer's response (including a description of the enquiry but without identifying its source) will be sent to all prospective tenderers that have received the tender documents.

8. Amendment of tender documents

8.1 At any time prior to the deadline for submission of tenders, the Employer may amend the tender documents by issuing addenda.

8.2 Any addendum shall be part of the tender documents and shall be communicated in writing or by fax to all prospective tenderers that have received the tender documents. Prospective tenderers shall immediately acknowledge receipt of any addendum by fax to the Employer, and it will be assumed that the information contained therein will have been taken into account by the tenderer in its tender.

8.3 To give prospective tenderers reasonable time in which to take the amendment into account in preparing their tenders, the Employer may, at its discretion, extend the deadline for the submission of tenders, as provided for in paragraph 13.2.

Preparation of First Stage Tenders

9. Language of tender

9.1 The tender and all documents and correspondence related to the tender shall be in the language of the tender as specified in the Tender Data. Any printed literature furnished by the tenderer may be written in another language so long as such literature is accompanied by an accurate translation of the pertinent passages in the language of the tender, in which case, for purposes of interpretation of the tender, the translation shall govern.

10. Documents comprising the tender

10.1 A First Stage tender submitted in accordance with these Instructions to Tenderers shall comprise the following:

(a) The Tender Form - First Stage and Attachment 1 to the Tender Form – Covenant of Integrity (in the format indicated in Volume I.iii), duly completed in the manner and detail indicated therein and signed by the tenderer.

(b) Attach. 1. Power of Attorney duly authorised by a notary public, indicating that the person(s) signing the tender have the authority to sign the tender and that the tender is binding upon the tenderer.

(c) Attach. 2. Qualification of Tenderer - in the absence of prequalification, documentary evidence that the tenderer satisfies the minimum qualifying requirements referred to in paragraph 3.2 and is otherwise qualified to perform the contract if its tender is accepted. Details of the documentation required are specified in the Tender Data.

(d) Attach. 3. Conformity of the Facilities - documentary evidence establishing that the Facilities to be supplied by the tenderer in its tender or in any alternative tender (if permitted) conform to the tender documents. Details of the required documents are specified in the Tender Data.

(e) Attach. 4. Subcontractors Proposed by the Tenderer - the tenderer shall include details of all major items of goods or services that it proposes to purchase or subcontract, giving details of the proposed subcontractors for each of these items. Tenderers are free to list more than one subcontractor for each item of the Facilities.

The tenderer shall have been duly authorised by the manufacturer or producer of all subcontracted Plant, Equipment or components to supply and/or install the relevant items in the Employer's country.

The tenderer shall be responsible for ensuring that any proposed subcontractor complies with the requirements of paragraph 3, and that any Plant, Equipment

or services to be provided by the subcontractor comply with the tender documents.

The Employer reserves the right to reject any proposed subcontractor prior to or during the clarification meeting with the tenderer.

(f) Attach. 5. Deviations - any deviations to the tender document requirements shall be listed only in Attach. 5. The Employer reserves the right to accept or reject any deviations.

(g) Attach. 6. Alternative Tenders - if permitted pursuant to paragraph 10.3 below, tenderers may, in addition to a fully conforming tender, submit an alternative tender.

(h) Attach. 7. Other documentation and information as may be specified in the Tender Data.

10.2 In addition to paragraph 10.1 above, tenders submitted by a joint venture or consortium of two or more firms shall comply with the following requirements:

(i) the tender shall include all the relevant information as described in paragraph 10.1(c) above for each member firm of the joint venture or consortium;

(ii) the tender shall be signed so as to be legally binding on all member firms of the joint venture or consortium;

(iii) one of the member firms of the joint venture or consortium, responsible for performing a key component of the contract, shall be nominated as being in charge; this authorisation shall be evidenced by submitting with the tender a power of attorney signed by legally authorised signatories of all the member firms of the joint venture or consortium;

(iv) the member firm of the joint venture or consortium in charge shall be authorised to incur liabilities and receive instructions for and on behalf of any and all member firms of the joint venture or consortium, and the entire execution of the contract, including payment, shall be done exclusively with the member firm in charge;

(v) all member firms of the joint venture or consortium shall be liable jointly and severally for the execution of the contract in accordance with the contract terms;

(vi) a copy of the agreement entered into by the member firms of the joint venture or consortium shall be submitted with the tender.

In order for a joint venture or consortium to qualify, each of its member firms or combination of member firms must meet the minimum criteria listed for an individual tenderer for the component of the contract they are designated to perform. Failure to comply with this requirement will result in rejection of the tender of the joint venture or consortium.

Pursuant to paragraph 3.5, a firm can be a member firm in one joint venture or consortium only; tenders submitted by joint ventures or consortia including the same member firm will be rejected.

10.3 Unless specified otherwise in the Tender Data, tenderers are permitted to propose technical or other "alternatives" with their First Stage tenders to those included in the tender documents, provided they can document that the proposed alternatives are to the benefit of the Employer and that they fulfil the principal objectives of the contract.

10.4 Any alternative proposed by tenderers in their First Stage tender pursuant to paragraph 10.3 above will be the subject of discussion during a clarification meeting, pursuant to paragraph 19.

10.5 First Stage tenders are technical tenders and shall contain no prices or price schedules or other reference to rates and prices for completing the Facilities. First Stage tenders containing such price information will be rejected.

11. Format and signing of tender

11.1 The tenderer shall prepare an original and the number of copies/sets of the tender specified in the Tender Data, clearly marking each one as: "FIRST STAGE TENDER - ORIGINAL", "FIRST STAGE TENDER - COPY NO. 1", "FIRST STAGE TENDER - COPY NO. 2," etc., as appropriate. In the event of any discrepancy between the original and any copy, the original shall govern.

11.2 The original and all copies of the tender, each comprising the documents specified in paragraph 10.1, shall be typed or written in indelible ink and shall be signed by the tenderer or person(s) duly authorised to sign legally binding documents on behalf of the tenderer. The latter authorisation shall be evidenced by written power of attorney accompanying the tender. All pages of the tender, except for unamended printed literature, shall be initialled by the person or persons signing the tender.

11.3 Any interlineations, erasures or overwriting shall be initialled by the person or persons signing the tender.

Submission of First Stage Tenders

12. Sealing and marking of First Stage tenders

12.1 The tenderer shall seal the original First Stage tender and each copy of the tender in separate envelopes, each containing the documents specified in paragraph 10, and shall

mark the envelopes as "FIRST STAGE TENDER - ORIGINAL" and "FIRST STAGE - COPIES", all duly marked as required in paragraph 11.1. The envelopes shall then be sealed in an outer envelope.

12.2 The inner and outer envelopes shall:

(a) be addressed to the Employer at the address set forth in the Tender Data; and

(b) bear the identification specified in the Tender Data.

12.3 The inner envelopes shall also bear the name and address of the tenderer to enable the tender to be returned unopened in case it is declared "late", pursuant to paragraph 14.

12.4 If the outer envelope is not sealed and marked as required by paragraphs 12.1, 12.2, and 12.3, the Employer will assume no responsibility for the misplacement or premature opening of the tender. If the outer envelope discloses the tenderer's identity, the Employer will not guarantee the anonymity of the tender submission but such disclosure will not constitute grounds for tender rejection.

13. Deadline for submission of First Stage tenders

13.1 First Stage tenders must be received by the Employer at the address specified in paragraph 12.2 no later than the time and date stated in the Tender Data.

13.2 The Employer may extend this tender submission deadline by amending the tender documents in accordance with paragraph 8.1, in which case all rights and obligations of Employer and tenderers previously subject to the deadline will thereafter be subject to the deadline as extended.

14. Late tenders

14.1 Any tender received by the Employer after the tender submission deadline may be rejected and returned unopened to the tenderer.

First Stage Tender Opening and Evaluation

15. Opening of First Stage tenders by Employer

15.1 The Employer will open all First Stage tenders in the presence of tenderers' representatives who choose to attend, immediately after the deadline for submission. The tenderers' representatives who are present shall sign a register evidencing their attendance.

15.2 The names of all tenderers who submitted First Stage tenders and the presence of any alternatives will be read out.

15.3 The Employer will prepare minutes of the tender opening, including the information disclosed to those present in accordance with paragraph 15.2.

16. Preliminary examination of First Stage tenders

16.1 The Employer will examine the tenders to determine whether they are complete, whether the documents have been properly signed, and whether the tenders are generally in order. Any tenders found to be non-responsive for any reason, or tenders not meeting the minimum levels of performance or other criteria specified in the tender documents will be rejected by the Employer and not included for further consideration. The Employer will also carry out a preliminary examination of any alternative tenders submitted by tenderers.

17. Evaluation of First Stage tender

17.1 The Employer will carry out a detailed evaluation of the tenders which satisfy the preliminary examination pursuant to paragraph 16 above, in order to determine whether the tender proposals are substantially responsive to the requirements set forth in the tender documents. In order to reach such a determination, the Employer will examine all aspects of the tenders, including any deviations from or modifications to the main tender,-- based on the information supplied by the tenderers, taking into account the factors specified in the Tender Data.

17.2 The Employer will also review complete technical alternatives, if any, offered by tenderers pursuant to paragraph 10.3 to determine whether such alternatives may constitute an acceptable basis for a Second Stage tender to be submitted on their own merits.

18. Qualification

18.1 In the absence of prequalification, the Employer will ascertain to its satisfaction whether tenderers determined as having submitted responsive First Stage tenders are qualified to perform the contract satisfactorily.

18.2 The Employer will take into account the tenderers' financial, technical and production capabilities, past performance and the minimum qualifying criteria referred to in paragraph 3.2. The determination of tenderers' qualifications will be based upon an examination of documentary evidence submitted by the tenderers, pursuant to paragraph 10.1(c), as well as such other information as the Employer deems necessary and appropriate.

18.3 Following an affirmative determination the Employer may invite the tenderer to a clarification meeting in accordance with paragraph 19. A negative determination will result in rejection of the tenderer's tender.

Clarification Meeting

19. Clarification of First Stage tenders and review of tenderers' proposed deviations and alternative solutions

19.1 The Employer may conduct clarification meetings with each or any tenderer to clarify any aspects of its First Stage tender that require explanation.

During these meetings, the Employer may also bring to the attention of the tenderer any amendments or changes to the First Stage tender, technical or otherwise, which the Employer may require. All such amendments or changes will be listed in an Annex to the Memorandum documenting the clarification meeting entitled "Changes Required Pursuant to First Stage Evaluation" and will be formally notified to the tenderer as part of the invitation to submit a Second Stage tender.

19.2 The Employer will also advise the tenderer of any exceptions or deviations in the First Stage tender that are unacceptable and that are to be withdrawn in the Second Stage tender, and of such exceptions or deviations that the Employer finds acceptable.

19.3 The Employer will also review any alternatives offered by the tenderer, if such alternatives are permitted, and will identify the degree (if any) to which such alternatives may be incorporated in the tenderer's Second Stage tender.

20. Invitation to submit Second Stage tenders

20.1 At the end of the First Stage evaluation and after holding clarification meetings, the Employer will:

(a) issue an amendment to the tender documents modifying *inter alia* and as needed, the evaluation criteria or other sections of the Instructions to Tenderers, the Special Conditions of Contract, and the Technical Specifications resulting from the First Stage evaluation and clarification meetings, with the objective of enhancing competition without compromising essential project objectives; and

(b) either

(i) invite a tenderer to submit an updated technical and commercial Second Stage tender based on the modifications (if any) listed in the "Changes Required Pursuant to First Stage Evaluation" Annex to the Memorandum of the clarification meeting held with the tenderer; or

(ii) invite a tenderer to submit an updated technical and commercial Second Stage tender based on an alternative proposed by the tenderer in

its First Stage tender with the modifications (if any) listed in the "Changes Required Pursuant to First Stage Evaluation" Annex to the Memorandum of the clarification meeting held with the tenderer; or

(iii) notify a tenderer that its tender has been rejected as substantially non-responsive, or that the tenderer does not meet the minimum qualification requirements set forth in the tender documents.

20.2 The deadline for submission of Second Stage tenders will be specified in the invitation to submit Second Stage tenders.

Preparation of Second Stage Tenders

21. Documents comprising the Second Stage tender

21.1 A Second Stage tender submitted in accordance with these Instructions to Tenderers shall comprise the following:

(a) A Tender Form - Second Stage (in the format indicated in Vol. I.iii) duly completed in the manner and detail indicated therein and signed by the tenderer.

(b) Attach. 1. Price Schedules (in the format indicated in Volume I.viii) duly completed by the tenderer in the manner and detail indicated therein and following the requirements of paragraphs 22 and 23.

(c) Attach. 2. Power of Attorney duly authorised by a notary public, confirming that the person(s) signing the tender have the authority to sign the tender and that the tender is binding upon the tenderer.

(d) Attach. 3. Tender Security, furnished in accordance with paragraph 25.

(e) Attach. 4. A copy of the Memorandum of the clarification meeting held with the tenderer.

(f) Attach. 5. The updated Technical Tender, consisting of updated Technical Specifications and Drawings and any other technical revisions required for the First Stage tender as recorded in the Memorandum of the clarification meeting;

(g) Attach. 6. Qualification of Tenderer - any changes that may have occurred between the time of submitting the First and Second Stage tenders that have any material effect on the tenderer's qualifications to perform the contract.

(h) Attach. 7. Conformity of Facilities - documentary evidence establishing that any additional or varied Facilities to be supplied and installed by the tenderer, as set forth in the Memorandum of the clarification meeting, are technically acceptable.

The documentary evidence of the conformity of the Facilities to the requirements of the Memorandum of the clarification meeting may be in the form of literature, drawings and other data.

(i) Attach. 8. Subcontractors Proposed by the Tenderer - if the tenderer proposes to engage any subcontractors in addition to those named in its First Stage tender, it shall give details of the name and nationality of the proposed subcontractor, including vendors, and the part of the Facilities it proposes to subcontract to or purchase from them. Tenderers are free to list more than one subcontractor against each item of the Facilities. Quoted rates and prices will be deemed to apply whichever subcontractor is appointed, and no adjustment of the rates and prices will be permitted.

The Employer reserves the right to reject any proposed subcontractor prior to award of contract. After discussion between the Employer and the Contractor, a list of the approved subcontractors for each item of work shall be attached to the Contract Agreement.

(j) Attach. 9. Other documentation and information which may be specified in the Tender Data.

22. Tender prices

22.1 Unless otherwise specified in the Tender Data and/or the Technical Specifications, tenderers shall quote for the entire Facilities on a "single responsibility" basis such that the total tender price covers all obligations of the Contractor pursuant to or to be reasonably inferred from the tender documents in respect of the design, manufacture, including procurement and subcontracting (if any), delivery, construction, installation and completion of the Facilities. This includes all requirements under the Contractor's responsibilities for the testing, precommissioning and commissioning of the Facilities, and where so required by the tender documents, the obtaining of all permits, approvals and licences etc., operation, maintenance and training services and such other items and services as may be specified in the tender documents, all in accordance with the requirements of the Conditions of Contract.

22.2 Tenderers shall provide a breakdown of the prices in the manner and detail called for in the Price Schedules. Where no Price Schedules are included in the tender documents, tenderers shall present their prices in the following manner:

Separate numbered Schedules shall be used for each of the following elements. The total amount from each Schedule (1 to 4) shall be summarised in a Grand Summary (Schedule 5) giving the total tender price(s) to be entered in the Tender Form.

Schedule No. 1	Plant and Equipment (including mandatory spare parts) supplied from abroad;
Schedule No. 2	Plant and Equipment (including mandatory spare parts) supplied from within the Employer's country;
Schedule No. 3	Local Transportation
Schedule No. 4	Installation and Other Services
Schedule No. 5	Grand Summary (Schedules Nos. 1 to 4)
Schedule No. 6	Recommended Spare Parts

Tenderers shall note that the Plant and Equipment included in Schedules Nos. 1 and 2 above exclude materials used for civil, building and other construction works. All such materials shall be included and priced under Schedule No. 4, Installation and Other Services.

22.3 In the Schedules, tenderers shall give the required details and a breakdown of their prices as follows:

(a) Plant and Equipment to be supplied from abroad (Schedule No. 1) shall be quoted on a CIP border point basis or CIP named place and other Incoterms as specified in the Tender Data, exclusive of any customs duties or other similar import taxes payable on the imported Plant and Equipment.

(b) Plant and Equipment manufactured or fabricated within the Employer's country (Schedule No. 2) shall be quoted on an EXW basis and shall be inclusive of all costs as well as duties and sales and other taxes paid or payable on components and raw materials incorporated or to be incorporated in the Plant and Equipment.

(c) Any customs duties or other similar import taxes paid or payable on directly imported components incorporated or to be incorporated in the Plant and Equipment manufactured or fabricated within the Employer's country.

(d) Local transportation, insurance and other local costs incidental to delivery of the Plant and Equipment to the Site (Schedule No.3).

(e) Installation and other services shall be quoted separately (Schedule No. 4) and shall provide for all labour, contractor's Equipment, temporary works, materials, consumables and all matters and things of whatsoever nature, including operations and maintenance services, the provision of operations and maintenance manuals, training. etc. where identified in the tender documents as necessary for the proper execution of the installation and other services, including all taxes, duties, levies and changes payable in the Employer's

country as of twenty-eight (28) days prior to the deadline for submission of tenders;

(f) Recommended spare parts shall be quoted separately (Schedule No. 6) as specified in either subparagraph (a) or (b) above, in accordance with the origin of the spare parts.

22.4 The terms EXW, CIP, etc., shall be governed by the rules prescribed in the current edition of *Incoterms*, published by the International Chamber of Commerce, Paris.

22.5 Unless specified otherwise in the Tender Data, prices quoted by the tenderer shall be fixed for the time period during which the contract is performed should it be awarded to the tenderer and shall not be subject to variation for any reason. A tender submitted with an adjustable price quotation which is not consistent with this paragraph shall be treated as non-responsive and rejected.

23. Tender currencies

23.1 Unless specified otherwise in the Tender Data, prices shall be quoted in the following currencies:

(a) For Plant and Equipment covered under subparagraph 22.3(a) to be supplied from abroad, the prices shall be quoted in any convertible currency or currencies including euro or a combination thereof.[2]

(b) For Plant and Equipment covered under subparagraph 22.3(b) to be supplied from within the Employer's country, the prices shall be quoted in the currency of the Employer's country. However, the costs of directly imported components incorporated or to be incorporated in the Plant and Equipment may be quoted in foreign currency and in accordance with the provisions of subparagraph 23.1(a).

(c) Local transportation, insurance and other local costs incidental to delivery of the Plant and Equipment covered under subparagraph 22.3(d) shall be quoted in either foreign and/or local currency, depending upon the currency in which the costs are to be incurred and in accordance with the provisions of subparagraphs 23.1(a) and (b).

(d) Installation and other services covered under subparagraph 23.3(e) shall be quoted in either foreign and/or local currency, depending upon the currency in which the costs are to be incurred and in accordance with the provisions of subparagraphs 23.1(a) and (b).

[2] Amended as part of Corrigendum No. 2, dated 17 February 1999

24. Tender validity period

24.1 Second Stage tenders shall remain valid for the period specified in the Tender Data, after the closing date for the receipt of Second Stage tenders prescribed by the Employer, pursuant to paragraph 28.1. A tender valid for a shorter period shall be rejected by the Employer as non-responsive.

24.2 In exceptional circumstances, the Employer may solicit the tenderer's consent to an extension of the tender validity period. The request and responses thereto shall be made in writing or by fax. If a tenderer agrees to extend the period of validity, the Tender Security shall also be extended accordingly. A tenderer may refuse the request without forfeiting its Tender Security. A tenderer granting the request will not be required nor permitted to modify its tender, except as provided in paragraph 24.3.

24.3 Where the tender is for a fixed price contract (not subject to price adjustment), if the tender validity period is so extended, the amounts payable in both local and foreign currency to the tenderer selected for award shall be increased by applying the factors specified in the Tender Data to both the local and the foreign currency component of the payments, respectively, for the period of delay beyond the expiration of the initial tender validity up to the time of notification of award. Tender evaluation will be based on the tender prices without considering this adjustment.

25. Tender Security

25.1 The tenderer shall furnish as part of its tender, a Tender Security in the amount stipulated in the Tender Data, in the currency of the tender, or in the equivalent amount in a freely convertible currency.

25.2 The Tender Security shall, at the tenderer's option, be in the form of a certified cheque, letter of credit or a bank guarantee from a reputable bank located in the Employer's country or abroad. The format of the bank guarantee shall be consistent with the form of Tender Security included in the tender documents; other formats may be permitted, subject to prior approval by the Employer. Tender Security shall remain valid for a period of twenty-eight (28) days following the last day of the original tender validity period, and following the last day of any extension of the tender validity period pursuant to paragraph 24.2.

25.3 Any tender not accompanied by an acceptable Tender Security shall treated as non-responsive and rejected. The Tender Security of a joint venture must be in the name of all the member firms in the joint venture or consortium submitting the tender.

25.4 The Tender Security of unsuccessful tenderers will be returned as promptly as possible but not later than twenty-eight (28) days after the last day of the tender validity period.

25.5 The Tender Security of successful tenderers will be returned when the tenderer has signed the Contract Agreement, and has furnished the required Performance Security.

25.6 The Tender Security may be forfeited:

(a) if a tenderer

(i) withdraws its tender during the tender validity period;

(ii) refuses to accept the corrections of computational errors in its tender price pursuant to paragraph 34.2; or

(iii) invalidates its tender pursuant to paragraph 32.2;

(b) in the case of a successful tenderer, if the tenderer fails:

(i) to sign the contract in accordance with paragraph 42; or

(ii) to furnish Performance Security in accordance with paragraph 43.

26. Format and signing of tender

26.1 The tenderer shall prepare an original and the number of copies/sets of the tender as specified in the Tender Data, clearly marking each one as "SECOND STAGE TENDER - ORIGINAL", "SECOND STAGE TENDER - COPY NO.1", "SECOND STAGE TENDER - COPY NO.2", etc. as appropriate. In the event of any discrepancy between the original and any copy, the original shall govern.

26.2 The original and all copies of the tender, each consisting of the documents listed in paragraph 21.1, shall be typed or written in indelible ink and shall be signed by the tenderer or person(s) duly authorised to act on behalf of the tenderer. The latter authorisation shall be evidenced by written power of attorney accompanying the tender and submitted pursuant to subparagraph 21.1(c). All pages of the tender, except for unamended printed literature, shall be initialled by the person or persons signing the tender.

26.3 Any interlineation, erasures or overwriting only shall be valid if initialled by the person or persons signing the tender.

Submission of Second Stage Tenders

27. Sealing and marking of Second Stage tenders

27.1 The tenderers shall place the original and each copy of the tender in separate envelopes, duly marking the envelopes as "SECOND STAGE TENDER - - ORIGINAL" and "SECOND STAGE TENDER - COPIES". These envelopes shall be placed in an outer envelope.

27.2 The inner and outer envelopes shall be sealed and:

(a) addressed to the Employer with the address given in the Tender Data; and

(b) bear the identification specified in the Tender Data .

27.3 The inner envelopes shall also bear the name and address of the tenderer so that the tender can be returned unopened in case it is declared "late".

27.4 If the outer envelope is not sealed and marked as required by paragraph 27 above, the Employer will assume no responsibility for the tender's misplacement or premature opening of the tender. If the outer envelope discloses the tenderer's identity, the Employer will not guarantee the anonymity of the tender submission, but such disclosure will not constitute grounds for rejection of the tender.

28. Deadline for submission of tenders

28.1 Second Stage tenders must be received by the Employer at the address specified in paragraph 27.2 no later than the time and date stated in the Letter of Invitation to submit a Second Stage tender.

28.2 The Employer may extend this tender submission deadline by amending the tender documents in accordance with paragraph 8, in which case all rights and obligations of the Employer and tenderers previously subject to the deadline will thereafter be subject to the deadline as extended.

29. Late tenders

29.1 Any tender received by the Employer after the tender submission deadline will be rejected and returned unopened to the tenderer.

30. Modification and withdrawal of tenders

30.1 The tenderer may modify or withdraw its Second Stage tender after submission, provided that written notice of the modification or withdrawal is received by the Employer prior to the tender submission deadline.

30.2 Modifications of a tender shall be prepared, sealed, marked and dispatched as follows:

(a) The tenderer shall provide an original and the number of copies specified in paragraph 26.1 of any modifications to its tender, clearly identified as such, in two inner envelopes, duly marking the envelopes as "SECOND STAGE TENDER MODIFICATIONS - ORIGINAL" and "SECOND STAGE TENDER MODIFICATIONS - COPIES". The envelopes shall be sealed in an outer envelope, duly marking the envelope as "SECOND STAGE TENDER MODIFICATIONS".

(b) Other provisions concerning the numbers, marking and dispatch of tender modifications shall be in accordance with paragraph 27.

30.3 A tenderer wishing to withdraw its tender shall notify the Employer in writing prior to the tender submission deadline. A withdrawal notice may also be sent by fax, but it must be followed by a signed confirmation copy, postmarked not later than the tender submission deadline. The notice of withdrawal shall:

(a) be addressed to the Employer at the address specified in subparagraph 27.2(a); and

(b) bear the contract name and the words "SECOND STAGE TENDER WITHDRAWAL NOTICE". Tender withdrawal notices received after the tender submission deadline will be ignored, and the submitted tender will be deemed to be a validly submitted tender.

30.4 No Second Stage tender may be modified or withdrawn in the interval between the tender submission deadline and the expiration of the tender validity period specified in paragraph 24.1. Withdrawal of a Second Stage tender during this interval may result in the tenderer's forfeiture of its Tender Security, pursuant to paragraph 25.6.

Second Stage Tender Opening and Evaluation

31. Opening of Second Stage tenders by Employer

31.1 The Employer will open the Second Stage tenders in the presence of the tenderers' representatives who choose to attend the opening, at the time, on the date and at the location specified in the Letter of Invitation to submit Second Stage tenders. The tenderers' representatives who are present shall sign a register evidencing their attendance.

31.2 Tenderers' names, tender modifications or withdrawals, tender prices, discounts, alternative tender prices (if any), the presence or absence of the required Tender Security, and other details as the Employer, at its discretion, may consider appropriate, will be announced at tender opening. No tender will be rejected at tender opening except for late tenders, which will be returned unopened to the tenderer, pursuant to paragraph 29.

31.3 Tender discounts or modifications furnished pursuant to paragraph 30 that are not opened, read out and recorded at tender opening will not be considered for tender evaluation. Withdrawn tenders will be returned unopened to the tenderers.

31.4 The Employer will prepare minutes of the tender opening, including the information disclosed to those present in accordance with paragraph 31.2.

32. Contacting the Employer

32.1 Subject to paragraph 33.1, no tenderer shall contact the Employer on any matter relating to its tender, from the time of Second Stage tender opening to the time the contract is awarded.

32.2 Any effort by a tenderer to influence the Employer's tender evaluation or award decisions, including the offering or giving of bribes, gifts or other inducement, may result in the invalidation of its tender and the forfeiture of its Tender Security, pursuant to paragraph 25.6.

33. Clarification of tenders

33.1 To assist in the examination, evaluation and comparison of tenders the Employer may, at its discretion, ask a tenderer for a clarification of its tender. Such clarification may be requested at any stage up to the award of the contract. Requests for clarification and responses thereto shall be in writing or by fax, and no change in the price or substance of the tender shall be sought, offered or permitted except as required to confirm the correction of computational errors determined by the Employer in the examination of the tenders in accordance with paragraph 34.2.

34. Preliminary examination of Second Stage tenders

34.1 The Employer will examine the Second Stage tenders to determine whether they are complete, whether any computational errors have been made, whether required Tender Securities have been furnished, whether the documents have been properly signed, and whether the tenders are generally in order.

34.2 Computational errors will be rectified on the following basis. If there is a discrepancy between the unit price and the total price that is obtained by multiplying the unit price and quantity, or between subtotals and the total price, the unit or subtotal price shall prevail and the total price shall be corrected. If there is a discrepancy between words and figures, the amount in words shall prevail. If the tenderer does not accept the correction of errors, its tender will be rejected and its tender security may be forfeited.

34.3 The Employer may waive any minor informality, non-conformity or irregularity in a tender that does not constitute a material deviation, and that does not prejudice or affect the relative ranking of any tenderer as a result of the detailed evaluation pursuant to paragraphs 36 and 37.

34.4 Prior to the detailed evaluation pursuant to paragraphs 36 and 37 the Employer will determine whether each tender is of acceptable quality, is complete, is substantially responsive to the tender documents and has properly incorporated all the modifications listed in the "Changes Required Pursuant to First Stage Evaluation". For purposes of this determination, a substantially responsive tender is one that conforms to all terms and conditions of the tender documents and the "Changes Required Pursuant to First

Stage Evaluation" without material deviations, objections or reservations. A material deviation, objection, or reservation is one (i) that affects in any substantial way the scope, quality or performance of the contract; (ii) that limits in any substantial way, inconsistent with the tender documents, the Employer's rights or the successful tenderer's obligations under the contract; or (iii) whose rectification would unfairly affect the competitive position of other tenderers who are presenting substantially responsive tenders.

34.5 A Second Stage tender containing technical or commercial deviations or alternatives not submitted as part of the First Stage tender will be treated as non-responsive. The Employer's determination of the responsiveness of a tender is to be based on the contents of the tender itself without recourse to extrinsic evidence.

34.6 If a Second Stage tender is not substantially responsive, it will be rejected by the Employer and may not subsequently be rendered responsive by the tenderer by correction or withdrawal of the non-conformity.

35. Conversion to single currency

35.1 To facilitate evaluation and comparison of tenders, the Employer will convert all tender prices expressed in various currencies into a single common currency as specified in the Tender Data.

36. Technical evaluation of Second Stage tender

36.1 The Employer will carry out a detailed technical evaluation of the Second Stage tenders not previously rejected as being substantially non-responsive in order to determine whether technical modifications to the base or alternative tenders required pursuant to the "Changes Required Pursuant to First Stage Evaluation", referred to in paragraph 20.1, have been properly addressed and are substantially responsive to the requirements set forth in the tender documents.

37. Commercial evaluation of Second Stage tender

37.1 Comparison between tenders shall be based on the EXW price of Plant and Equipment to be supplied from within the Employer's country, such price to exclude customs duties and other import taxes paid or payable on directly imported components incorporated or to be incorporated in such Plant and Equipment, and the CIP (border point or named place of destination) price of Plant and Equipment to be supplied from outside the Employer's country; plus the cost of local transportation, installation and other services to be provided under the contract. The Employer's evaluation will also include the costs resulting from application of the evaluation factors pursuant to paragraph 37.2.

37.2 The Employer's evaluation of a tender will take into account, in addition to the tender prices indicated in the Price Schedules, additional factors specified in the Tender Data.

37.3 Any adjustments in price which result from application of the above evaluation factors shall be added, for the purposes of comparative evaluation only, to arrive at the "Evaluated Tender Price". Tender prices quoted by tenderers shall remain unaltered.

38. Changes in qualification status

38.1 Prior to proceeding with the award of contract to the tenderer determined as having submitted the lowest evaluated and responsive Second Stage tender, the Employer will determine to its satisfaction that the tenderer is still qualified to satisfactorily perform the contract. In particular, the Employer shall consider the tenderer's contract work in hand, future commitments, current litigations or other circumstances that have arisen or intervened since the submission of the First and Second Stage tenders that would change the tenderer's qualifications.

38.2 An affirmative determination will be a prerequisite for award of the contract to the tenderer. A negative determination will result in rejection of the tenderer's tender, in which event the Employer will proceed to the next lowest evaluated tender to make a similar determination of that tenderer's capabilities to perform satisfactorily.

38.3 The capabilities of the vendors and subcontractors proposed to be used by the lowest evaluated tenderer will also be evaluated. Their participation should be confirmed by a letter of intent or similar documentary evidence. Should a vendor or subcontractor be determined to be unacceptable, the tenderer will not be rejected, but will be required to substitute an acceptable vendor or subcontractor without any change to the tender price.

39. Employer's right to accept any tender and to reject any or all tenders

39.1 The Employer reserves the right to accept or reject any First or Second Stage tender, and to annul the tender process and reject all tenders at any time prior to award of contract, without incurring any liability to any tenderer or tenderers or any obligation to inform any tenderer or tenderers of the grounds for the Employer's action.

Award of Contract

40. Award criteria

40.1 Subject to paragraph 39, the Employer will award the contract to the successful tenderer whose Second Stage tender has been determined to be substantially responsive and has been determined as the lowest evaluated tender, provided further that the tenderer is determined to be qualified to perform the contract satisfactorily.

41. Notification of award

41.1 Prior to the expiration of the Second Stage tender validity period, the Employer will notify the successful tenderer in writing by registered letter or by fax, to be confirmed in writing by registered letter, that its Second Stage tender has been accepted. The notification of award will constitute the formation of the contract.

41.2 As soon as the successful tenderer has furnished the Performance Security pursuant to paragraph 43, the Employer will promptly notify all unsuccessful tenderers and will discharge their Tender Securities, pursuant to paragraph 25.4.

42. Signing of Contract Agreement

42.1 At the same time as the Employer notifies the successful tenderer that its Second Stage tender has been accepted, the Employer will send the tenderer the Contract Agreement provided in the tender documents, incorporating all terms and conditions agreed between the parties.

42.2 Within twenty-eight (28) days of receipt of the Contract Agreement, the successful tenderer shall sign and date the Contract Agreement and return it to the Employer.

43. Performance Security

43.1 Within twenty-eight (28) days of receipt of the notification of award, the successful tenderer shall furnish the Performance Security in accordance with the Conditions of Contract in the form provided in Volume II.iv of the tender documents or in another form acceptable to the Employer.

43.2 Failure of the successful tenderer to comply with the requirements of paragraphs. 42 or 43 shall constitute sufficient grounds for the annulment of the award and forfeiture of the Tender Security, in which event the Employer may make the award to the next lowest evaluated tenderer or invite new tenders.

44. Alternative dispute resolution procedure

44.1 The Employer proposes that the Adjudicator provided for in the Conditions of Contract shall be appointed in the manner stipulated in the Tender Data.

45 Prohibited Practices

45.1 The Bank requires that clients (including beneficiaries of Bank loans), as well as tenderers, suppliers, sub suppliers, contractors, subcontractors, concessionaires and consultants and sub consultants under Bank-financed contracts, observe the highest standard of ethics during the procurement and execution of such contracts. In pursuance of this policy, the Bank:

(a) defines, for the purposes of this provision, Prohibited Practice as one or more of the following:

(i) "corrupt practice" means the offering, giving, receiving, or soliciting, directly or indirectly, anything of value to influence improperly the actions of another party.

(ii) "fraudulent practice" means any act or omission, including a misrepresentation, that knowingly or recklessly misleads, or attempts to mislead, a party to obtain a financial or other benefit or to avoid an obligation.

(iii) "coercive practice" means impairing or harming, or threatening to impair or harm, directly or indirectly, any party or the property of the party to influence improperly the actions of a party.

(iv) "collusive practice" means an arrangement between two or more parties designed to achieve an improper purpose, including influencing improperly the actions of another party; and

(v) "theft" means the misappropriation of property belonging to another party.

(vi) "misuse of the Bank's resources" means improper use of the Bank's resources, committed either intentionally or through reckless disregard; and,

(vii) "obstructive practice" means (i) destroying, falsifying, altering or concealing of evidence material to a Bank investigation, which impedes the Bank's investigation; (ii) making false statements to investigators in order to materially impede a Bank investigation into allegations of a Prohibited Practice; (iii) failing to comply with requests to provide information, documents or records in connection with a Bank investigation; (iv) threatening, harassing or intimidating any party to prevent it from disclosing its knowledge of matters relevant to a Bank investigation or from pursuing the investigation; or (v) materially impeding the exercise of the Bank's contractual rights of audit or inspection or access to information.

(b) will reject a proposal for award if it determines that a tenderer, supplier, sub supplier, contractor, subcontractor, concessionaire, consultant or sub consultant recommended for award has engaged in Prohibited Practices in competing for the contract in question;

(c) will cancel the portion of the Bank financing allocated to a contract for goods, works, services or concessions if it at any time determines that Prohibited Practices were engaged in by representatives of the Borrower or of a beneficiary of the Bank financing during the procurement or the execution of that contract,

without the Borrower having taken timely and appropriate action satisfactory to the Bank to remedy the situation;

d) may declare a firm ineligible, either indefinitely or for a stated period of time, to be awarded a Bank-financed contract if it at any time determines that the firm has engaged in Prohibited Practices in competing for, or in executing, a Bank-financed contract; and

(e) reserves the right, where a Borrower or a firm has been found by the final judgement of a judicial process in a member country of the Bank or a finding by the enforcement (or similar) mechanism of another international organisation, including Mutual Enforcement Institutions, to have engaged in Prohibited Practices.

(i) to cancel all or part of the Bank financing for such Borrower; and

(ii) to declare that such a firm is ineligible, either indefinitely or for a stated period of time, to be awarded a Bank-financed contract; and

f) will have the right to require that, in contracts financed by the Bank, a provision be included requiring suppliers, sub suppliers, contractors, subcontractors, concessionaires, consultants and sub-consultants to permit the Bank to inspect their accounts and records relating to the performance of the contract and to have them audited by auditors appointed by the Bank.

45.2 Furthermore, tenderers shall be aware of the provisions stated in Sub-Clauses 9.6 and 42.2.1 (c) of the General Conditions of Contract.

VOLUME I.ii

TENDER DATA

The following tender-specific data for the Facilities to be procured amend and/or supplement the provisions in the Instructions to Tenderers. Whenever there is a conflict, the provisions herein shall prevail over those in the Instructions to Tenderers.

Instructions to Tenderers -
para. ref.

para. 1.1:	**Name of Employer**	D.O.O. "Vodovod i kanalizacija" Danilovgrad
para. 3.1:	**Eligibility**	Tendering for contract is open to tenderers from any country
para. 3.2:	**Qualifying requirement**	

para. 3.2.1 Eligibility
Tenderers shall meet the eligibility requirements set forth in Clause 3. ITT and Table 2.1 Eligibility Volume I.ix. Attachment 1 -Tenderers Qualifications - Qualification Summary.

3.2.2 Historical non-performance
A consistent history of historical non-performance and/or litigation awards against the Tenderer or any of a joint venture may result in rejection of the tender. Tenderers shall meet the requirements set forth in the Table 2.2 Historical Contract Non-Performance, Volume I.ix. Attachment 1 -Tenderers Qualifications- Qualification Summary.

3.2.3 Financial Situation

3.2.3.1 Historical financial performance
The audited balance sheets for the last 3 **(three)** years shall be submitted and must demonstrate the soundness of the Tenderer's financial position, showing long-term profitability. Where necessary, the Employer will make inquiries with the Tenderer's bankers.

Criterion:
The annual operating profit of the Tenderer (in case of a JVCA of Each Partner) must be positive (including all administrative and financial expenditure as well as depreciation according to plan, but excluding extraordinary expenditure and income as well as taxes) for at least 2 **(two)** of the previous 3 **(three)** financial years.

3.2.3.2 Average Annual Construction Turnover
The Tenderer shall have an average annual turnover (defined as billing for works in progress and completed) over the last 3 **(three)** financial years of not less than **2,000,000.00 (two million) EURO** equivalent. In case of a JVCA all Partners combined shall have an average annual construction turnover (defined as billing for works in progress and completed) over the last 3 **(three)** financial years of not less than **2,000,000.00 (two million) EURO** equivalent.

3.2.3.3 Financial Resources
The Tenderer shall complete Attachment 1 (Tenderers Qualifications) provided in Volume I.ix., Schedule of Supplementary Information, and demonstrate that it has access to, or has available, liquid assets, unencumbered real assets, lines of credit, and other financial means sufficient to meet the construction cash flow for the contract for a period of 4 **(four)** months, estimated as not less than **500,000.00 (five hundred thousand) EURO** equivalent, taking into account the applicant's commitments for other contracts.

Total requested credit facilities must meet following criteria:
- for a Single Entity 500,000.00 EURO
- for JVCA
  - Partner of a JVCA min. 15%

- Leading Partner of a JVCA min. 40%.

3.2.4 Experience

3.2.4.1 General Experience

The Tenderer (in case of a JVCA Each Partner) shall demonstrate experience under contracts in the role of contractor or prime contractor for the last **5 (five)** years prior to the tender submission deadline.

3.2.4.2 Specific Experience

The Tenderer (in case of a JVCA all Partners combined) shall demonstrate that it has successful experience as prime contractor in the execution of at least **1 (one)** project of design and execution of construction of sewerage of a nature and complexity comparable to the proposed contract that have been successfully and substantially completed within the last **5 (five)** years prior to the tender submission deadline, each with a value of at least **1,500,000.00 EURO (one million and five hundred thousand)** (excluding VAT). The similarity shall be based on the physical size, complexity, methods/technology or other characteristics as described below.

The Tenderer must demonstrate that works and supplies have been done directly by him in position of prime contractor or Leading Partner of JVCA.

The Tenderer must submit Taking Over Certificates or other documents of contractual relevance with clear evidence of (as a minimum) the name of contract, name of prime contractor, construction period, taking over date and final contract price.

3.2.5 Contractor's Personnel

The Tenderer shall provide suitably qualified personnel to fill the following positions. For each position the Tenderer will supply information on a first-choice candidate and an alternate, each of whom should meet the experience requirements specified below. Another requirement on Contractor's staff are listed in **Table 1. - iv) Contractor's Personnel** due to Attachment 2 and Qualification Summary due to Attachment 1., Table 2.5.

Should the Employer finds the proposed personnel not sufficiently qualified, it can request the Tenderer to replace the personnel before at the second stage proposal. Falling to propose adequate personnel at the second stage may result in rejection of the tender.

3.2.6 Contractor's Equipment

The Tenderer shall own, or have assured access to (through hire, lease, purchase agreement, availability of manufacturing equipment, or other means), the key items of equipment in accordance with **Table 1. - iii) Contractor's equipment** due to Attachment 2. and Qualification Summary, due to Attachment 1, Table 2.6. in full working order, and must demonstrate that, based on known commitments, they will be available for use in the proposed contract.

The Tenderer may also list alternative equipment which he would propose to use for the contract, together with an explanation of the proposal.
Should the Employer finds the proposed equipment inadequate, it can request the Tenderer to replace or provide additional equipment at the second stage proposal. Falling to propose adequate equipment at the second stage may result in rejection of the tender.

para. 5.1: **Pre-tender meeting or site visit** July 6th, 2017, at 15:00

para. 6.1: **Other documents comprising the tender documents**

The tender is comprising also other tender documents as following:

i) Manufacturer's authorisation form due to Vol. I.vi.
ii) Form of Completion Certificate due to Vol. II. vi.

para. 7.1: **Employer's mailing address** D.O.O. "Vodovod i kanalizacija" Danilovgrad
Caja Scepanovica bb, 81 410 Danilovgrad, State of Montenegro
E-mail: jkzpdanilovgrad@t-com.me

para. 9.1: **Language of the tender** English

FIRST STAGE TENDER

para. 10.1: **Documentary evidence to be submitted**

para. 10.1(c): **Qualification of tenderer**

To establish its qualifications to perform the contract in accordance ITT, the Tenderer shall provide the information requested in the corresponding Information Sheets included hereunder. Documents of Attachment 1 comprising a part of Supplementary Information due to Volume I. ix.

Attachment 1 - Tenderers Qualifications

i)	Form ELI - 1:	Tenderer's Information Sheet
ii)	Form ELI - 2:	JVCA Information Sheet
iii)	Form CON - 2:	Historical Contract Non-Performance
iv)	Form FIN - 1:	Financial Situation
v)	Form FIN - 2:	Average Annual Construction Turnover
vi)	Form FIN - 3:	Financial Resources
vii)	Form FIN - 4:	Current Contract Commitments / Works in Progress
viii)	Form EXP - 1:	General Construction Experience
ix)	Form EXP - 2:	Specific Construction Experience.

para. 10.1(d): **Conformity of Facilities**

The documentary evidence of the conformity of the facilities to the tender documents may be in the form of literature, drawings and data, and shall furnish:

(i) a detailed description of the essential technical and performance characteristics of the Facilities;
(ii) a list giving full particulars, including available sources, of all spare parts, special tools, etc., necessary for the proper and continuing functioning of the Facilities for a period of 3 years following Completion of the Facilities in accordance with the provisions of the contract; and
(iii) commentary on the Employer's Technical Specifications and adequate evidence demonstrating the substantial responsiveness of the Facilities to those specifications. Tenderers shall note that the standards for skill, materials and Equipment designated by the Employer in the tender documents are intended to be descriptive (establishing standards of quality and performance) only and not restrictive. A tenderer may substitute alternative standards, brand names and/or catalogue numbers in its tender, provided that it demonstrates to the Employer's satisfaction that the substitutions are substantial, equivalent or superior to those designated in the Technical Specifications (Volume III).

para. 10.1(f): Deviations

Tenderers shall provide separately details of deviations, objections or reservations, other than alternatives, from the requirements of the tender documents that they would like to be considered by the Employer during an eventual clarification meeting. The Employer will consider all such deviations. Those that it accepts will be incorporated into the Annex of the Memorandum referred to in paragraph 19.1. Those rejected must be formally withdrawn by that tenderer in its Second Stage tender, failing which the tender will be rejected.

para. 10.1(h): Other documentation

The Schedule of Supplementary Information shall accompany, but not form part, of the Tender and is required to be submitted in sufficient detail to demonstrate the Tenderer's capability to perform the Contract.
The Schedule of Supplementary Information shall be submitted using the forms provided in Volume I. ix. of Tender Form, and include the following information:

Attachment 2 - Preliminary Programme

i) Site organisation and Method Statement
ii) Mobilisation and Construction Schedules
iii) Contractor's Equipment
iv) Contractor's Personnel

Attachment 3 - Other Information

i) List of proposed Subcontractors
ii) Details of Proposed Insurer
iii) Details of Proposed Bank Issuing Performance and Advance Payment Securities

para. 10.3:	**Technical alternatives**	alternative tenders shall be permitted

Tenderers may submit alternative tenders in addition to the requested tenders, provided that they include complete technical justifications and meet basic performance and technical criteria. Any alternative tenders that the Employer considers technically acceptable at the end of the First Stage evaluation will be treated as base tenders in the Second Stage evaluation.

para. 11.1:	**Number of copies of tender**	**1 (one) original + 5 (five) copies,** electronic versions on CD/DVD (pdf files) **1 (one)**
para. 12.2(a):	**Address of Employer**	D.O.O. "Vodovod i kanalizacija" Danilovgrad Caja Scepanovica bb, 81 410 Danilovgrad, State of Montenegro E-mail: jkzpdanilovgrad@t-com.me
para. 12.2(b):	**Tender identification**	EBRD ME DAN 9000

The tenderer shall record on the tender envelope the Employer's name and address, the tender identification and the words "SEWERES - DO NOT OPEN BEFORE August 14th, 2017 AT 15:00"

para. 13.1:	**Deadline for submission of First Stage tenders**	August 14th, 2017 at 15:00
para. 17.1:	**Factors in evaluation of First Stage tenders**	

The Employer's evaluation of a First Stage tender will take into account:

(a) overall completeness and compliance with the Technical Specifications and Drawings; the technical merits of alternatives offered and deviations from the Technical Specifications; suitability of the Facilities offered in respect of the environmental and climactic conditions prevailing at the site; quality, function and operation of any process control concept included in the tender:

(b) achievement by the Facilities of specified performance criteria;

(c) compliance with any time schedules specified in the tender documents and any alternative time schedules offered by tenderers, as evidenced by the milestone schedule provided in the tender;

(d) type, quantity and long-term availability of mandatory and recommended spare parts and maintenance services;

(e) any other relevant technical factors deemed necessary or prudent to be considered;

(f) any deviations to the commercial and contractual provisions stipulated in the tender documents. A deviation taken to Governing Law, Taxes and Duties), Defect Liability), Functional Guarantee, Patent Indemnity or Limitation of Liability would be unacceptable and would have to be withdrawn;

(g) alternative terms of payment to those specified in the tender documents;

(h) the projected operating and maintenance requirements during the life of the facilities;

(i) the performance and productivity of the facilities offered;

(j) the extent of the need for training associated with different tenders; and

(k) the extent of the work, services, facilities, etc. needed from the Employer or third parties in connection with each tender.

SECOND STAGE TENDER

para. 21.1(j):	**Other documentation**	
para. 22.1:	**Tender prices**	Lump sum contract
para. 22.5:	**Tender prices**	The tender price is fixed for the entire time period during which the Contract is performed
para. 23.1:	**Tender currencies**	EURO
para. 24.1:	**Tender validity period**	120 days
para. 24.3:	**Extension of tender validity period**	N/A

The adjustment of the tender price in accordance with paragraph 26.3 shall be from the original expiry date of the tender validity, pro-rata up to the date of award of the contract and shall be calculated on the basis of an annual increase for foreign costs of 1 percent and an annual increase for local costs of 1 percent.

para. 25.1:	**Tender Security**	**50,000.00** EURO

para. 27.1:	**Number of copies of tender**	1 (one) original + 5 (five) copies, electronic versions on CD/DVD (pdf files) 1 (one)
para. 27.2(a):	**Address of Employer**	D.O.O. "Vodovod i kanalizacija" Danilovgrad Caja Scepanovica bb, 81 410 Danilovgrad, State of Montenegro E-mail: jkzpdanilovgrad@t-com.me
para. 27.2(b):	**Tender identification**	

The tenderer shall enter the Employer's name and address, the tender identification and the words "SEWERES - DO NOT OPEN BEFORE..." [*the date and time prescribed for the opening of tenders*]

para. 35.1:	**Conversion to common currency**	EURO

To facilitate evaluation and comparison, the Employer will convert all tender prices into EURO at the selling exchange rate established by the Central Bank of Montenegro for similar transactions on [*insert a specific date not earlier than twenty-eight (28) days prior to tender opening and not later than the expiry of the initial tender validity period specified in paragraph 24*].

para. 37.2:	**Tender evaluation factors**	there are no additional evaluation criteria

para. 44.1: Appointment of Adjudicator

If, on the day the Contract Agreement is signed, the Employer and the Contractor have not agreed on the appointment of an Adjudicator, the Adjudicator shall be designated by the President of FIDIC or a Person appointed by the President and confirmed in the Special Conditions of Contract at the request of either party. The Adjudicator shall be deemed to be jointly appointed by the Employer and the Contractor.

VOLUME I.iii

TENDER FORM - TWO STAGE TENDER - FIRST STAGE TENDER

Date: .....

Name of Contract: Danilovgrad Municipal Infrastructure - Rehabilitation of existing and construction of new sewers

To: D.O.O. "Vodovod i kanalizacija" Danilovgrad, Caja Scepanovica bb, 81410 Danilovgrad, State of Montenegro

Having examined the tender documents, including Addenda Nos. *(insert numbers),* the receipt of which is hereby acknowledged, we, the undersigned, offer to design, manufacture, test, deliver, install and precommission the Facilities under the above-named Contract in full conformity with the said tender documents.

We further undertake, if invited to do so by you and at our own cost, to attend a clarification meeting at a place of your choice for the purposes of reviewing our First Stage Tender and duly noting all amendments and additions thereto, and omissions therefrom which you may require.

We further undertake, upon receiving your written instruction, to proceed with the preparation of our Second Stage Tender, to update our First Stage Tender in accordance with the requirements as will be contained in the Memorandum of the clarification meeting and to complete our commercial tender for the Facilities in accordance with our updated technical tender.

We agree to abide by this First Stage Tender, which consists of this letter and Attachments 1 through ___ hereto, for a period of ***120*** **days** from the date fixed for submission of tenders as stipulated in the tender documents, and it, together with the above written undertakings, shall remain binding upon us, provided that we are invited to attend a clarification meeting with you before the expiration of that period.

We acknowledge that Attachment 1 to the Tender Form - Covenant of Integrity, forms part of this Tender Form.

Dated this ..... day of ..... year .....

.....
(signature)

In the capacity of

.....
(position)

Duly authorised to sign this Tender for and on behalf of

.....
(name of tenderer)

VOLUME I.iii

TENDER FORM - TWO STAGE TENDER - FIRST STAGE TENDER

Date: .....05/9/2017.....

STRABAG AG
Ortenburgerstraße 27, A-9800 Spittal/Drau, Austria

Name of Contract: Danilovgrad Municipal Infrastructure - Rehabilitation of existing and construction of new sewers

To: D.O.O. "Vodovod i kanalizacija" Danilovgrad, Caja Scepanovica bb, 81410 Danilovgrad, State of Montenegro

Having examined the tender documents, including Addenda Nos. *(insert numbers)*, the receipt of which is hereby acknowledged, we, the undersigned, offer to design, manufacture, test, deliver, install and precommission the Facilities under the above-named Contract in full conformity with the said tender documents.

We further undertake, if invited to do so by you and at our own cost, to attend a clarification meeting at a place of your choice for the purposes of reviewing our First Stage Tender and duly noting all amendments and additions thereto, and omissions therefrom which you may require.

We further undertake, upon receiving your written instruction, to proceed with the preparation of our Second Stage Tender, to update our First Stage Tender in accordance with the requirements as will be contained in the Memorandum of the clarification meeting and to complete our commercial tender for the Facilities in accordance with our updated technical tender.

We agree to abide by this First Stage Tender, which consists of this letter and Attachments 1 through ___ hereto, for a period of ***120*** **days** from the date fixed for submission of tenders as stipulated in the tender documents, and it, together with the above written undertakings, shall remain binding upon us, provided that we are invited to attend a clarification meeting with you before the expiration of that period.

We acknowledge that Attachment 1 to the Tender Form - Covenant of Integrity, forms part of this Tender Form.

Dated this ...5..... day of ..September..... year ...2017.

.....
(signature)

In the capacity of
..... Authorised Representative.....

Duly authorised to sign this Tender for and on behalf of
STRABAG AG
Ortenburgerstraße 27, A-9800 Spittal/Drau, Austria

Attachment 1 to Tender Form

COVENANT OF INTEGRITY

To: D.O.O. "Vodovod i kanalizacija" Danilovgrad

We declare and covenant that neither we nor anyone, including any of our directors, employees, agents, joint venture partners, consultants or sub-contractors, where these exist, acting on our behalf with due authority or with our knowledge or consent, or facilitated by us, has engaged, or will engage, in any Prohibited Practice (as defined below) in connection with the tendering process or in the execution or supply of any works, goods or services for **REHABILITATION OF EXISTING AND CONSTRUCTION OF NEW SEWERS; Tender No: EBRD ME DAN 9000 Procurement ref: 8733-IFT-41252** (the "Contract") and covenant to so inform you if any instance of any such Prohibited Practice shall come to the attention of any person in our organisation having responsibility for ensuring compliance with this Covenant.

We shall, for the duration of the tender process and, if we are successful in our tender, for the duration of the Contract, appoint and maintain in office an officer, who shall be a person reasonably satisfactory to you and to whom you shall have full and immediate access, having the duty, and the necessary powers, to ensure compliance with this Covenant.

We declare and covenant that, except for the matters disclosed in this Covenant of Integrity:

(i) we, our subsidiaries and affiliates, and all of our directors, employees, agents or joint venture partners, where these exist, have not been convicted in any court of any offence involving a Prohibited Practice in connection with any tendering process or provision of works, goods or services during the ten years immediately preceding the date of this Covenant;

(ii) none of our directors, employees, agents or a representatives of a joint venture partner, where these exist, has been dismissed or has resigned from any employment on the grounds of being implicated in any Prohibited Practice;

(iii) we, our subsidiaries and affiliates and our directors, employees, agents or joint venture partners, where these exist, are not prohibited from participation in a tendering procedure on the grounds of having been found by the final judgement of a judicial process or a finding by the enforcement (or similar) mechanism of another international organisation to have engaged in a Prohibited Practice;

(iv) we, our subsidiaries and affiliates, as well as any subcontractors, or suppliers or affiliates of the subcontracts or supplier are not subject to any sanction imposed by resolution of the United Nations Security Council.

If applicable, provide full disclosure of any convictions, dismissal, resignations, exclusions or other information relevant to Articles i) ii) iii) or (iv) in the box below.

Name of Entity Required to be Disclosed	Reason Disclosure is Required[1]
N/A	N/A

[1] For each matter disclosed, provide details of the measures that were taken, or shall be taken, to ensure that neither the disclosed entity nor any of its directors, employees or agents commits any Prohibited Conduct in connection with the Tender for this Contract.

D.O.O. VODOVOD I KANALIZACIJA DANILOVGRAD VIK

041

STRABAG
STRABAG AG

For the purpose of this Covenant, the terms set forth below define Prohibited Practices as:

(i) "corrupt practice" which means the offering, giving, receiving, or soliciting, directly or indirectly, of anything of value to influence improperly the actions of another party;

(ii) "fraudulent practice" which means any act or omission, including a misrepresentation, that knowingly or recklessly misleads, or attempts to mislead, a party to obtain a financial or other benefit or to avoid an obligation;

(iii) "coercive practice" which means impairing or harming, or threatening to impair or harm, directly or indirectly, any party or the property of the party to influence improperly the actions of a party; and,

(iv) "collusive practice" which means an arrangement between two or more parties designed to achieve an improper purpose, including influencing improperly the actions of another party

(v) "theft" which means theft which means the misappropriation of property belonging to another party.

(vi) "misuse of the Bank's resources" means improper use of the Bank's resources, committed either intentionally or through reckless disregard; and,

(vii) "obstructive practice" means (i) destroying, falsifying, altering or concealing of evidence material to a Bank investigation, which impedes the Bank's investigation; (ii) making false statements to investigators in order to materially impede a Bank investigation into allegations of a Prohibited Practice; (iii) failing to comply with requests to provide information, documents or records in connection with a Bank investigation; (iv) threatening, harassing or intimidating any party to prevent it from disclosing its knowledge of matters relevant to a Bank investigation or from pursuing the investigation; or (v) materially impeding the exercise of the Bank's contractual rights of audit or inspection or access to information.

Following the submission of our tender, we grant the project financier, the European Bank for Reconstruction and Development (EBRD) and/or persons appointed by them, the right of inspection of our, and any proposed subcontractors, accounts and records and permission to have any such accounts and records audited by auditors appointed by the Bank, if required by the Bank. We accept to preserve these records generally in accordance with applicable law but in any case for at least six years from the date of substantial performance of the Contract.

We further declare that no affiliate of the Employer is participating in our tender in any capacity whatsoever.

D.O.O. VODOVOD I KANALIZACIJA VIK DANILOVGRAD

C42

STRABAG
STRABAG AG

VOLUME I.iv

TENDER FORM - TWO STAGE TENDER - SECOND STAGE TENDER

Date: .....

Name of Contract: Danilovgrad Municipal Infrastructure - Rehabilitation of existing and construction of new sewers
To: D.O.O. "Vodovod i kanalizacija" Danilovgrad , Caja Scepanovica bb, 81410 Danilovgrad, State of Montenegro

Having examined the tender documents, including Addenda Nos. *(insert numbers),* and your requirements incorporated in the Memorandum of the clarification meeting held between us on (*insert date*) , we, the undersigned, offer to design, manufacture, test, deliver, install, precommission and commission the Facilities under the above-named Contract in full conformity with the said tender documents and the said Memorandum for the sum of:

.....
(amount of foreign currency in words)

..... (.....)
(amount in figures)

and

.....
(amount of local currency in words)

..... (.....)
(amount in figures)

or such other sums as may be determined in accordance with the terms and conditions of the Contract. The above amounts are in accordance with the price schedules attached herewith and are made part of this tender.

We undertake, if our tender is accepted, to commence the Facilities, and to achieve Completion within the times stated in the tender documents.

If our tender is accepted, we undertake to provide an advance payment security and a Performance Security in the form and amounts, and within the times specified in the tender documents.

We agree to abide by this tender for a period of ***120*** **days** from the date set for submission of the Second Stage Tenders as stipulated in the letter of invitation to submit a Second Stage Tender, and it shall remain binding upon us and may be accepted by you at any time prior to the expiration of that period.

Until a formal Contract Agreement is prepared and executed between us, this tender, together with your written acceptance thereof and your notification of award, shall constitute a binding contract between us.

We understand that you are not bound to accept the lowest or any tender you may receive.

Dated this ..... day of 19

.....
(signature)

In the capacity of

.....
(position)

Duly authorised to sign this tender for and on behalf of

.....
(name of tenderer)

VOLUME I.v

TENDER SECURITY FORM

Date: .....

Name of Contract: Danilovgrad Municipal Infrastructure - Rehabilitation of existing and construction of new sewers

To: D.O.O. "Vodovod i kanalizacija" Danilovgrad, Caja Scepanovica bb, 81410 Danilovgrad, State of Montenegro

WHEREAS *(name of tenderer)* (hereinafter called "the tenderer") has submitted its Tender dated *(date of tender)* for the performance of the above-named Contract (hereinafter called "the Tender")

KNOW ALL PERSONS by these present that WE *(name of bank)* of *(address of bank)* (hereinafter called "the Bank"), are bound unto D.O.O. "Vodovod i kanalizacija" Danilovgrad, Caja Scepanovica bb, 81410 Danilovgrad, State of Montenegro (hereinafter called "the Employer") in the sum of:

50,000.00 EURO (in words fifty thousand EURO)

for which payment, well and truly to be made to the said Employer, the Bank binds itself, its successors and assigns by these present.

Signed on behalf of the said Bank this ..... day of 2017

THE CONDITIONS of this obligation are:

1. If the tenderer withdraws its Tender during the period of tender validity specified by the tenderer in the Tender Form, or

2. If the tenderer, having been notified of the acceptance of its Tender by the Employer during the period of tender validity:

   (a) fails or refuses to sign the Form of Contract Agreement when required, or

   (b) fails or refuses to issue the Performance Security in accordance with the tender documents,

WE undertake to pay to the Employer up to the above amount upon receipt of its first written demand, without the Employer having to substantiate its demand, provided that in its demand the Employer will note that the amount claimed by it is due to it, owing to the occurrence of one or more of the above-named CONDITIONS, and specifying the occurred condition or conditions.

This guarantee will remain in full force up to and including *(the date twenty-eight (28) days after the period of tender validity)*, and any demand in respect thereof must reach the Bank not later than the above date.

For and on behalf of the Bank

.....
(*signature*)

.....
(*signature*)

.....
(*title*)

.....
(*title*)

VOLUME I.vi

MANUFACTURER'S AUTHORISATION FORM

[*date*]

TO: [*Name of the Employer*]

WHEREAS [*name of the Manufacturer*] who are established and reputable manufacturers of [*name and/or description of the goods*] having factories at [*address of factory*] do hereby authorise [*name and address of Agent*] to submit a tender, and subsequently negotiate and sign the Contract with you for the above goods manufactured by us.

We hereby extend our full guarantee and warranty as per Clause 23 of the General Conditions of Contract for the goods offered for supply by the above firm in response to this Invitation for Tenders.

.....
[*signature for and on behalf of Manufacturer*]

This letter of authority should be on the letterhead of the Manufacturer and should be signed by a person competent and having the power of attorney to bind the Manufacturer. It should be included by the tenderer in its tender.

VOLUME I.vi

MANUFACTURER'S AUTHORISATION FORM

11.9.2017

TO:
D.O.O. "Vodovod i kanalizacija" Danilovgrad
Caja Scepanovica bb Danilovgrad
81410 State of Montenegro

WHEREAS *APLAST D.O.O.* who are established and reputable manufacturers of

- POLYETHYLENE PIPING Polyethylene (PE) piping→Pipes made of high-density polyethylene (HDPE) used for the construction of sewer systems must comply with EN 12201 (pressure applications), EN 12666 (pressure-less applications). Pipes of min. PN 10 shall be used for pressure applications. The min. rigidity of all pipes and fittings must be SN 8 (8 kN /m2).

having factories at *PETROVČE 115a, 3301 ŽALEC* do hereby authorise Strabag AG to submit a tender, and subsequently negotiate and sign the Contract with you for the above goods manufactured by us.

We hereby extend our full guarantee and warranty as per Clause 23 of the General Conditions of Contract for the goods offered for supply by the above firm in response to this Invitation for Tenders.

APLAST
Aplast d.o.o. | Petrovče 115a | 3301 Petrovče | Slovenija 4

.....
Branko Potočnik, director Aplast d.o.o.

This letter of authority should be on the letterhead of the Manufacturer and should be signed by a person competent and having the power of attorney to bind the Manufacturer. It should be included by the tenderer in its tender.

D.O.O. VODOVOD I KANALIZACIJA VIK DANILOVGRAD

STRABAG
STRABAG AG

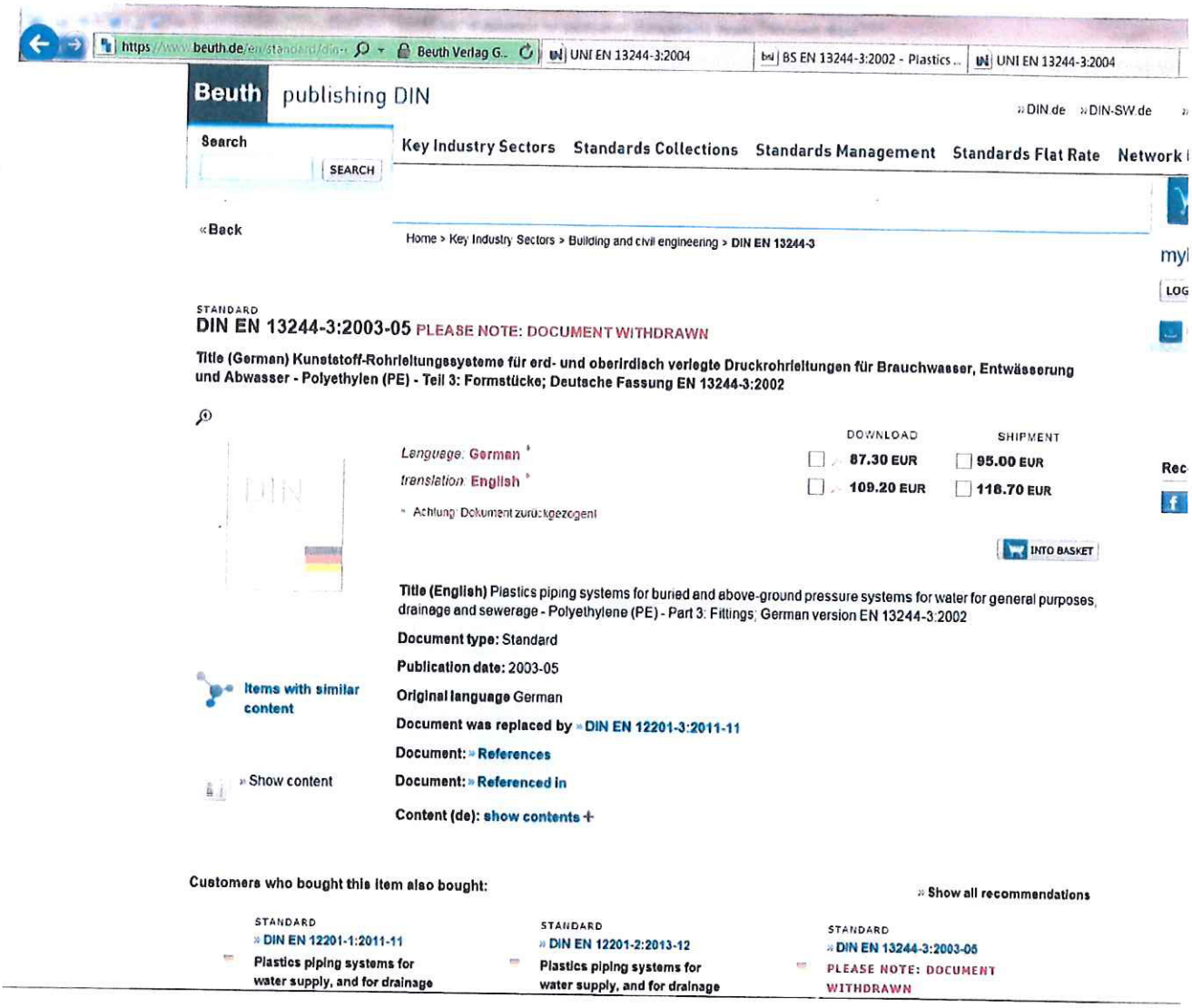
https://www.beuth.de/en/standard/din-...
Beuth Verlag G...
UNI EN 13244-3:2004
BS EN 13244-3:2002 - Plastics ...
UNI EN 13244-3:2004
Beuth publishing DIN
» DIN.de » DIN-SW.de
Search
SEARCH
Key Industry Sectors
Standards Collections
Standards Management
Standards Flat Rate
Network
« Back
Home > Key Industry Sectors > Building and civil engineering > DIN EN 13244-3
STANDARD
DIN EN 13244-3:2003-05 PLEASE NOTE: DOCUMENT WITHDRAWN
Title (German) Kunststoff-Rohrleitungssysteme für erd- und oberirdisch verlegte Druckrohrleitungen für Brauchwasser, Entwässerung und Abwasser - Polyethylen (PE) - Teil 3: Formstücke; Deutsche Fassung EN 13244-3:2002
Language: German *
translation: English *
* Achtung: Dokument zurückgezogen!
DOWNLOAD
87.30 EUR
109.20 EUR
SHIPMENT
95.00 EUR
116.70 EUR
INTO BASKET
Title (English) Plastics piping systems for buried and above-ground pressure systems for water for general purposes, drainage and sewerage - Polyethylene (PE) - Part 3: Fittings; German version EN 13244-3:2002
Document type: Standard
Publication date: 2003-05
Original language German
Document was replaced by » DIN EN 12201-3:2011-11
Document: » References
Document: » Referenced in
Content (de): show contents +
Items with similar content
» Show content
Customers who bought this item also bought:
» Show all recommendations
STANDARD
» DIN EN 12201-1:2011-11
Plastics piping systems for water supply, and for drainage
STANDARD
» DIN EN 12201-2:2013-12
Plastics piping systems for water supply, and for drainage
STANDARD
» DIN EN 13244-3:2003-05
PLEASE NOTE: DOCUMENT WITHDRAWN

VOLUME I.vi

MANUFACTURER'S AUTHORISATION FORM

04.12.2017

D.O.O. "Vodovod i kanalizacija" Danilovgrad
Caja Scepanovica bb Danilovgrad
81410 State of Montenegro

WHEREAS "Peštan" who are established and reputable manufacturers of PVC sewerage pipes and fittings for pressure-less systems (according EN 1401) PVC pipes and fittings of pressure systems (according EN 1452-3) and HDPE water pipes (according EN 13244,EN 12666) having factories at Bukovik,Serbia do hereby authorise Strabag AG to submit a tender, and subsequently negotiate and sign the Contract with you for the above goods manufactured by us.

We hereby extend our full guarantee and warranty as per Clause 23 of the General Conditions of Contract for the goods offered for supply by the above firm in response to this Invitation for Tenders.

.....
[*signature for and on behalf of Manufacturer*]

This letter of authority should be on the letterhead of the Manufacturer and should be signed by a person competent and having the power of attorney to bind the Manufacturer. It should be included by the tenderer in its tender.

D.O.O. VODOVOD I KANALIZACIJA VIK DANILOVGRAD

STRABAG
STRABAG AG

HOBAS Rohre GmbH
Wietersdorf 1
9373 Klein St. Paul I Austria
T +43.42 64.28 52.0
F +43.42 64.28 52.56

hobas.austria@hobas.com
www.hobas.com

HOBAS®

VOLUME I.vi

MANUFACTURER'S AUTHORISATION FORM

30.11.2017.

TO:
D.O.O. "Vodovod i kanalizacija" Danilovgrad
Caja Scepanovica bb Danilovgrad
81410 State of Montenegro

Whereas **HOBAS Rohre GmbH** who is established and reputable manufacturer of GRP pipe systems, according to EN 14364, having factories: HOBAS Rohre GmbH, Wietersdorf 1, 9373, Austria, HOBAS Rohre GmbH, Gewerbepark 1, 17039 Trollenhagen, Germany, HOBAS Pipe Systems Str, Drumul Mare nr. 2, Clinceni, Judetul Ilfov, Romania and HOBAS System Polska Sp. z o.o, Ul. Koksownicza 11, 41 300 Dąbrowa Górnicza Poland do hereby authorise ***STRABAG AG, Zetskih vladara br. 5, 81000 Podgorica, Montenegro*** to submit a tender, and subsequently negotiate and sign the Contract with you for the above goods manufactured by us.

We hereby extend our full guarantee and warranty as per Clause 23 of the General Conditions of Contract for the goods offered for supply by the above firm in response to this Invitation for Tenders.

Signed: _____

HOBAS Rohre GmbH
Wietersdorf
A-9373 Klein St. Paul
HOBAS Tel. 04264/2852-0, Fax 2852-45

Name: Fedor Draušnik

Title: Sales Manager Alpe Adria Region

Duly authorized to sign this Authorization on behalf of HOBAS Rohre GmbH

Dated on 30th November 2017.

D.O.O. VODOVOD I KANALIZACIJA DANILOVGRAD PIB: 02023134

Mitglied des GWS

ÖVGW MITGLIED DER ÖVGW

Zertifiziertes Qualitätsmanagementsystem
DIN EN ISO 14001
DIN EN ISO 9001
DIN EN ISO 18001

BV: BKS Bank AG
IBAN: AT21 1700 0001 0015 4552, BIC: BFKKAT2K
Firmenbuchnummer 101250y
Landesgericht Klagenfurt
UID-Nr. ATU 26080807

STRABAG
STRABAG AG

HYDROVISION
WE ARE ENGINEERS

Hydrovision d.o.o.
Timočke divizije 7/20
11000 Beograd
Tel/Fax. 011 394 79 96
email. office@hydrovision.rs

www.hydrovision.rs
Račun 105-11081-57
PIB 108655759
MB 21042358
ŠIFRA 4690

Date 05.12.2017.

VOLUME I.vi

MANUFACTURER'S AUTHORISATION FORM

TO:

D.O.O. "Vodovod i kanalizacija" Danilovgrad

Caja Scepanovica bb Danilovgrad

81410 State of Montenegro

WHEREAS HYDROVISION DOO, Timocke divizije 7/20, 11000 Belgrade who is official representative for Serbia and Montenegro of SULZER AUSTRIA GmbH, who are established and reputable manufacturers of pumps and follow equipment having factories at Vadstena Sweden; Wexford Ireland, etc. do hereby authorize STRABAG AG Zetskih vladara br.5 / 81000 Podgorica / Montenegro to submit a tender, and subsequently negotiate and sign the Contract with you for the above goods manufactured by us.

List of pumps:

PS-1-1 pump type AS 0830 S13/4D
PS-1 pump type AS 0830 S13/4D
PS-2-1 pump type XFP 100C CB1
PS-2 pump type XFP 100C CB1
PS-3-1 pump type AS 0830 S13/4D
PS-3-2 pump type AS 0830 S13/4D
PS-3 pump type XFP 150G CB1
PS-4 pump type XFP 100C CB1
PS-5-1 pump type XFP 100C CB1
PS-5-2 pump type XFP 100C CB1

We hereby extend our full guarantee and warranty as per Clause 23 of the General Conditions of Contract for the goods offered for supply by the above firm in response to this Invitation for Tenders.

HYDROVISION DOO BEOGRAD - VOŽDOVAC

Nenad Žarkić, Direktor

D.O.O. VODOVOD I KANALIZACIJA DANILOVGRAD ViK

STRABAG AG

SULZER

AS 0830 D 50 HZ

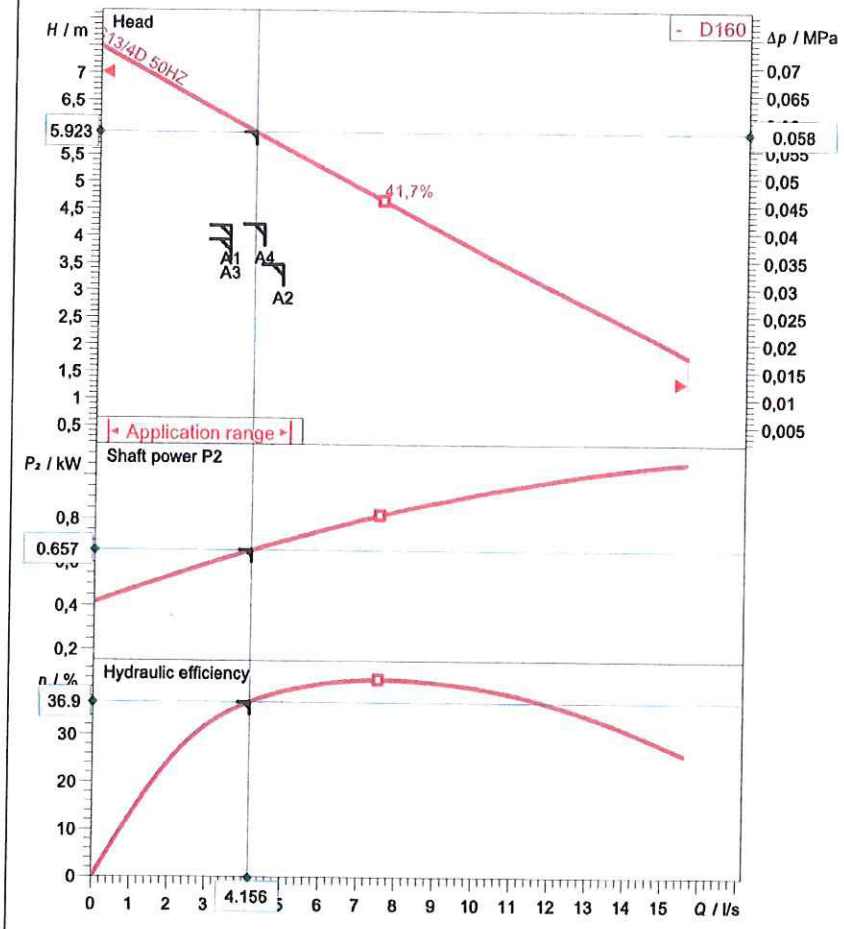

Testnorm
ISO 9906: 2012, HI 11.6/14.6 ≤10kW

2017-12-04

Operating data specification			
Flow	4,16 l/s	Head	5,92 m
Efficiency	36,9 %	Shaft power	0,657 kW
NPSH		Fluid	Water
Temperature	20 °C	Nature of system	Single head pump
No. of pumps	1		
Pump data			
Type	AS 0830 D 50 HZ	Make	SULZER
Series	AS	Impeller	Vortex impeller
N° of vanes	6	Impeller size	160 mm
Free passage	60 mm	Suction flange	
Discharge flange	DN80	Type of installation	
Moment of inertia			Wet-well stationary
Motor data			
Rated voltage	400 V	Frequency	50 Hz
Rated power P2	1,3 kW	Nominal Speed	1330 1/min
Number of poles	4	Efficiency	67,2 %
Power factor	0,77	Rated current	3,6 A
Starting current	11,1 A	Rated torque	9,34 Nm
Starting torque	20 Nm	Degree of protection	IP 68
Insulation class	F	No. starts per hour	15

Sulzer reserves the right to change any data and dimensions without prior notice
and can not be held responsible for the use of information contained in this software.

Spaix® 4, Version 4.3.4 - 2017/03/02 (Build 576)
Data version Mar-2017

D.O.O. "VODOVOD I KANALIZACIJA" ViK APATINILOVGRAD

STRABAG
STRABAG AG

Curve number	Pump performance curves	SULZER
Reference curve AS 0830 D 50 HZ	AS 0830 D 50 HZ	

			Discharge DN80	Frequency 50 Hz
Density 998,3 kg/m³	Viscosity 1,005 mm²/s	Testnorm ISO 9906: 2012, HI 11.6/14.6 ≤10kW	Rated speed 1434 1/min	Date 2017-12-04
Flow 4,16 l/s	Head 5,92 m	Rated power 0,657 kW	Hydraulic efficiency 36,9 %	NPSH

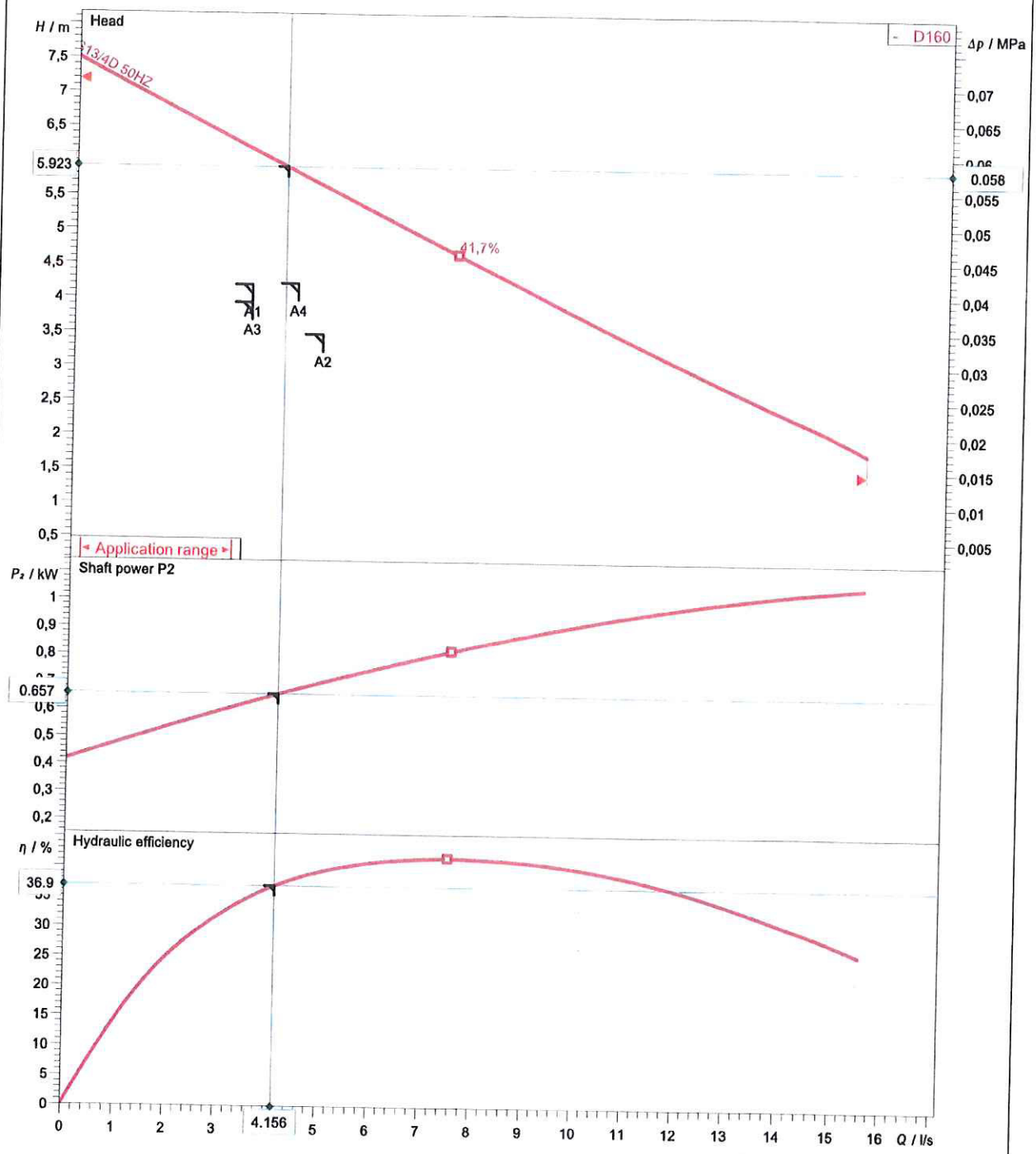

Impeller size 160 mm	N° of vanes 6	Impeller Vortex impeller	Solid size 60 mm	Revision

Sulzer reserves the right to change any data and dimensions without prior notice and can not be held responsible for the use of information contained in this software.

Spaix® 4, Version 4.3.4 - 2017/03/02 (Build 576)
Data version Mar-2017

D.O.O. VODOVOD I KANALIZACIJA VIK DANILOVGRAD

STRABAG
STRABAG AG

Frequency 50 Hz	**Motor performance curve** S13/4D 50HZ	SULZER

Rated power	Service factor	Nominal Speed	Number of poles	Rated voltage	Date
1,3 kW	1	1330 1/min	4	400 V	2017-12-04

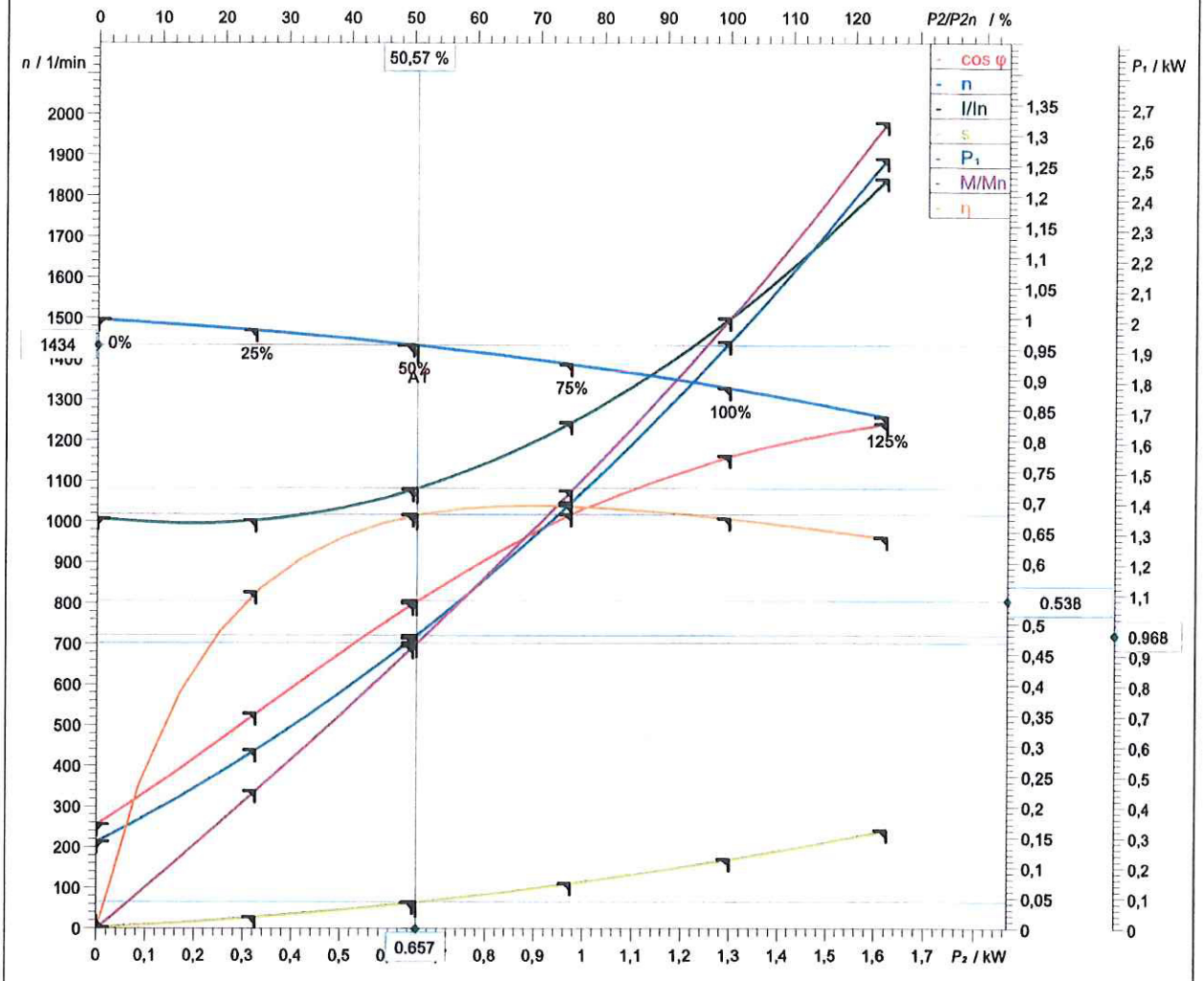

Symbol	No load	25 %	50 %	75 %	100 %	125 %
P_2 / kW	0	0,325	0,65	0,975	1,3	1,625
P_1 / kW	0,2867	0,5893	0,9587	1,406	1,933	2,535
η / %	0	55,15	67,8	69,35	67,24	64,09
n / 1/min	1497	1471	1435	1388	1329	1258
cos φ	0,171	0,3531	0,5339	0,6791	0,7749	0,828
I / A	2,42	2,409	2,592	2,988	3,601	4,42
s / %	0,1997	1,935	4,331	7,469	11,4	16,13
M / Nm	0	2,11	4,325	6,708	9,341	12,34

Tolerance according to VDE 0530 T1 12.84 for rated power

Starting current	Starting torque	Moment of inertia	No. starts per hour
11,1 A	20 Nm		15

Sulzer reserves the right to change any data and dimensions without prior notice
and can not be held responsible for the use of information contained in this software.

Spaix® 4, Version 4.3.4 - 2017/03/02 (Build 576)
Data version Mar-2017

D.O.O. VODOVOD I KANALIZACIJA VIŠEGRAD
VIK
STRABAG AG

SULZER	Massblatt AS0830 S10/4 - S25/4 Dimension sheet Plan d'encombrementt	No: AN-M 12.24 -02 Drawn: 18.07.97/C.Quirke Issue Date: 22.02.02 Änderungen vorbehalten Technical changes reserved Con riserva di modifiche Con reserva de modificaciones Sous réserve de modification

50Hz	60Hz	H
S10/4	S10/4	437
S13/4	S16/4	437
S22/4	S25/4	450

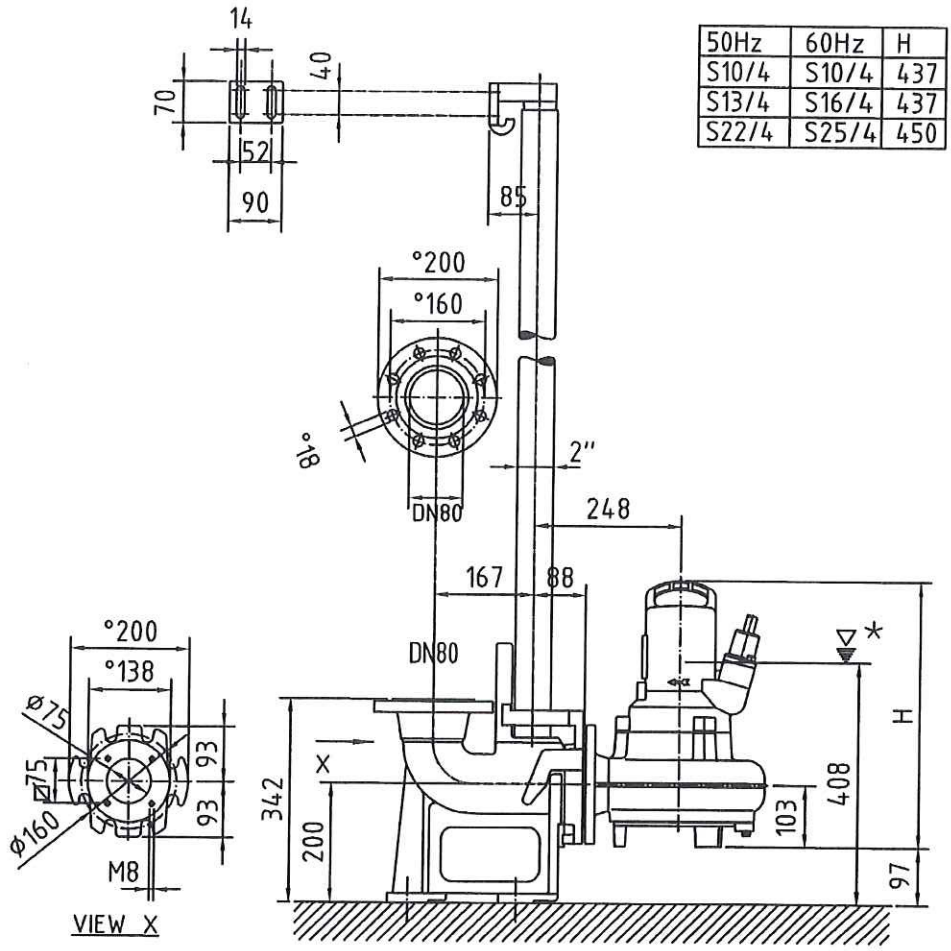

✳ LOWEST SWITCH OFF POINT FOR AUTOMATIC OPERATION

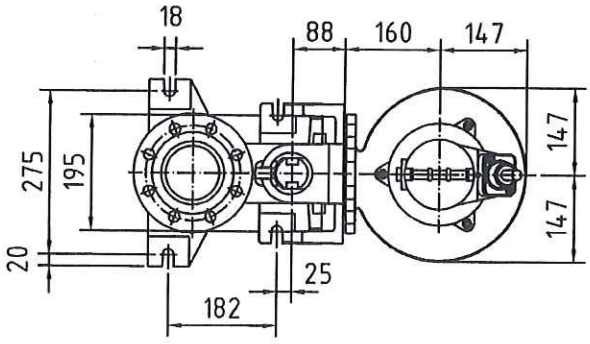

D.O.O. VODOVOD I KANALIZACIJA DANILOVGRAD ViK
STRABAG AG

SULZER

XFP100C CB1 50HZ

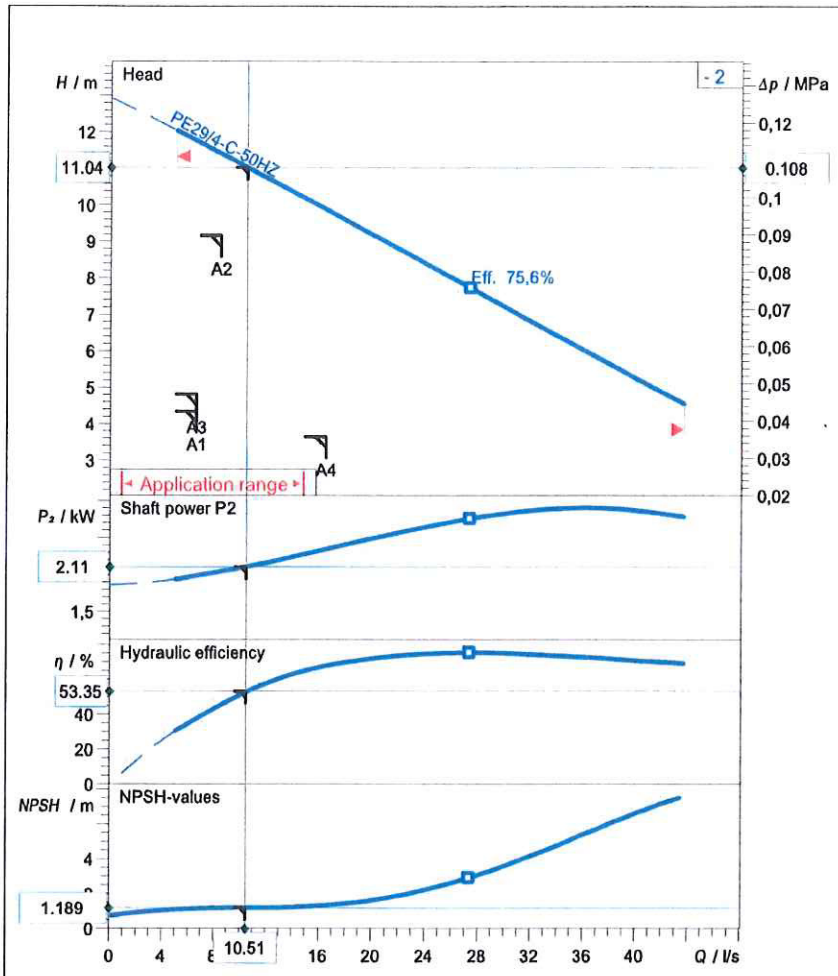

Testnorm
ISO 9906: 2012, HI 11.6/14.6 ≤10kW

2017-12-04

Operating data specification			
Flow	10,5 l/s	Head	11 m
Efficiency	53,3 %	Shaft power	2,11 kW
NPSH	1,19 m	Fluid	Water
Temperature	20 °C	Nature of system	Single head pump
No. of pumps	1		
Pump data			
Type	XFP100C CB1 50HZ	Make	SULZER
Series	XFP PE1-PE3	Impeller	Contrablock Plus impeller, 1 vane
N° of vanes	1	Impeller size	195 mm
Free passage	75 mm	Suction flange	DN100
Discharge flange	DN100	Type of installation	Wet Well installation with pedestal
Moment of inertia	0,0166 kg m²		
Motor data			
Rated voltage	400 V	Frequency	50 Hz
Rated power P2	2,95 kW	Nominal Speed	1440 1/min
Number of poles	4	Efficiency	87,8 %
Power factor	0,76	Rated current	6,4 A
Starting current	36 A	Rated torque	19,6 Nm
Starting torque	28,4 Nm	Degree of protection	IP 68
Insulation class	H	No. starts per hour	15

Sulzer reserves the right to change any data and dimensions without prior notice
and can not be held responsible for the use of information contained in this software.

Spaix® 4, Version 4.3.4 - 2017/03/02 (Build 576)
Data version Mar-2017

D.O.O. VODOVOD I KANALIZACIJA VIK VLOVGRAD

STRABAG
STRABAG AG

Curve number	Pump performance curves	SULZER
Reference curve XFP100C-CB	XFP100C CB1 50HZ	

			Discharge DN100	Frequency 50 Hz
Density 998,3 kg/m³	Viscosity 1,005 mm²/s	Testnorm ISO 9906: 2012, HI 11.6/14.6 ≤10kW	Rated speed 1457 1/min	Date 2017-12-04
Flow 10,5 l/s	Head 11 m	Rated power 2,11 kW	Hydraulic efficiency 53,3 %	NPSH 1,19 m

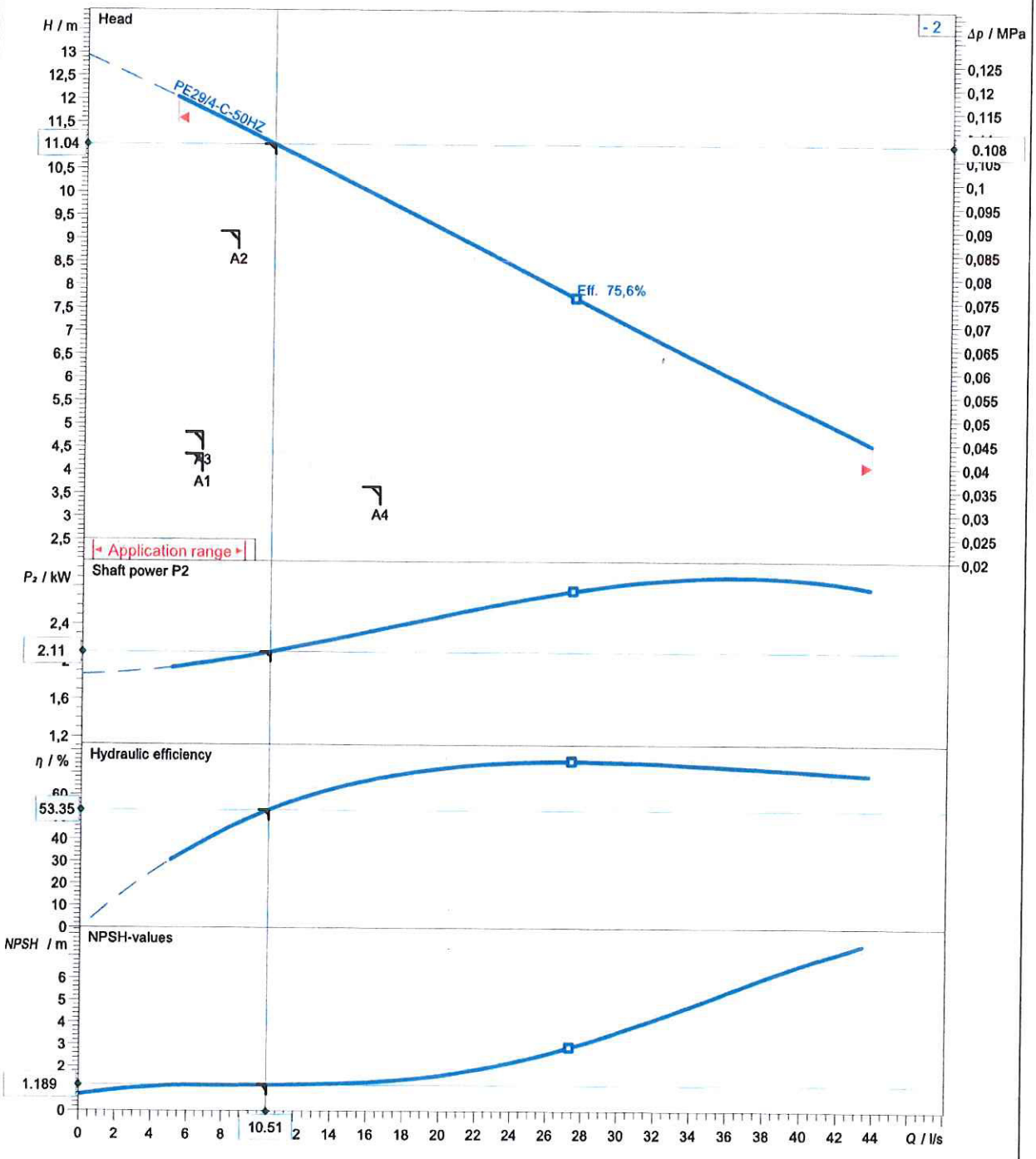

Impeller size	N° of vanes	Impeller	Solid size	Revision
195 mm	1	Contrablock Plus impeller, 1 vane	75 mm	

Sulzer reserves the right to change any data and dimensions without prior notice
and can not be held responsible for the use of information contained in this software.

D.O.O. VODOVOD I KANALIZACIJA ViK DANILOVGRAD

STRABAG AG

Frequency	Motor performance curve	SULZER
50 Hz	PE29/4-C-50HZ	

Rated power	Service factor	Nominal Speed	Number of poles	Rated voltage	Date
2,95 kW	1	1440 1/min	4	400 V	2017-12-04

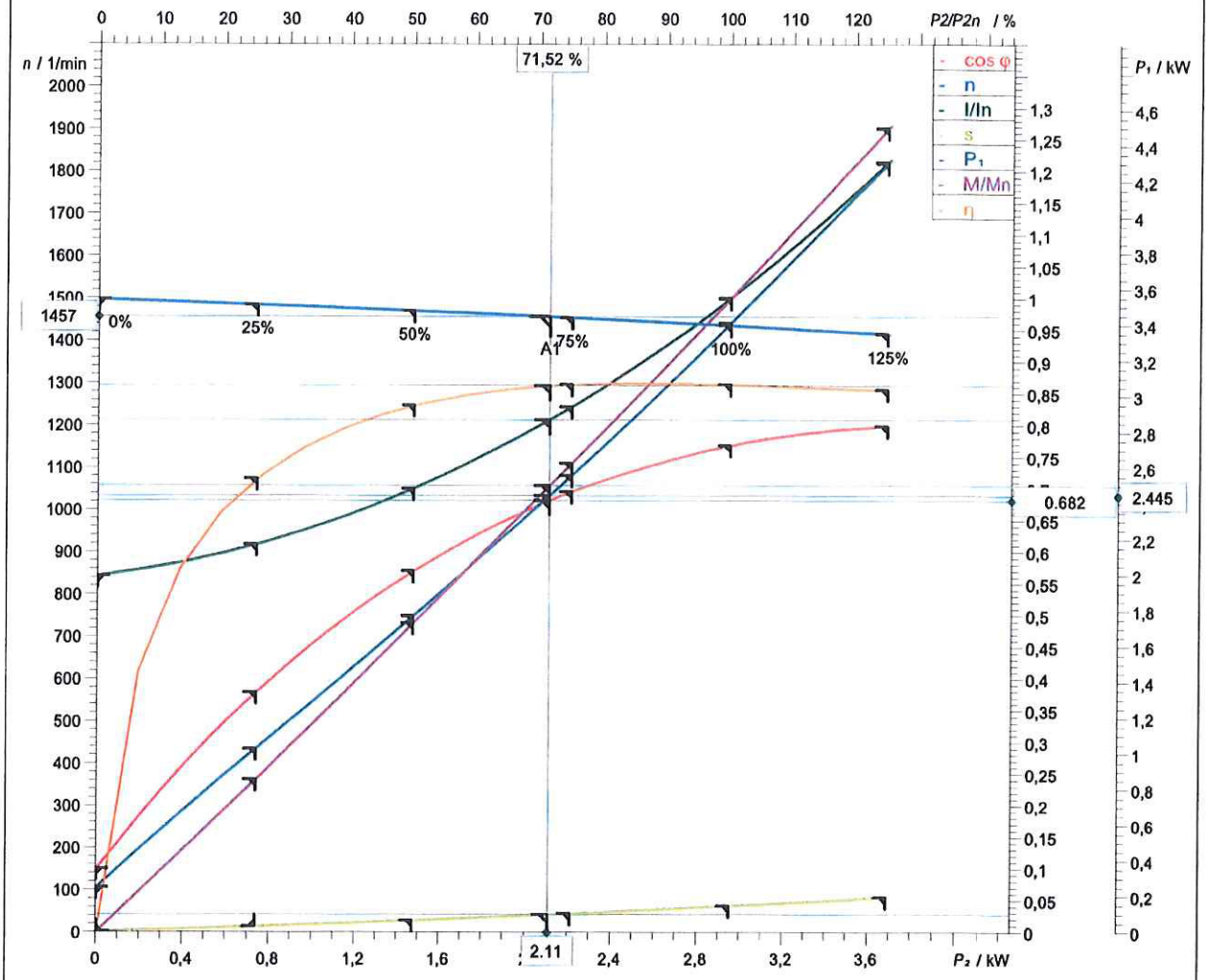

Symbol	No load	25 %	50 %	75 %	100 %	125 %
P_2 / kW	0	0,7375	1,475	2,213	2,95	3,687
P_1 / kW	0,251	1,029	1,772	2,559	3,411	4,305
η / %	0	71,66	83,22	86,48	86,48	85,66
n / 1/min	1498	1485	1471	1455	1437	1416
cos φ	0,1006	0,3791	0,5706	0,6956	0,7689	0,7993
I / A	3,601	3,919	4,484	5,309	6,404	7,774
s / %	0,1356	0,9685	1,92	2,997	4,211	5,573
M / Nm	0	4,741	9,574	14,52	19,61	24,86

Tolerance according to VDE 0530 T1 12.84 for rated power

Starting current	Starting torque	Moment of inertia	No. starts per hour
36 A	28,4 Nm	0,009 kg m²	15

Sulzer reserves the right to change any data and dimensions without prior notice and can not be held responsible for the use of information contained in this software.

Spaix® 4, Version 4.3.4 - 2017/03/02 (Build 576)
Data version Mar-2017

D.O.O. VODOVOD I KANALIZACIJA VIK VILOVGRAD
STRABAG AG

SULZER

Massblatt XFP 100C-CB1 Nassinstallation
Dimension sheet WET-WELL Installation
Dimensioni Installazione sommersa
Hoja de dimensiones instalación sumergida
Plan d'encombrement Installation noyee

No: AN-M.22.558 - 03
Drawn: 12/05/09 D.Whelan
Issue Date: 09/05/2013
Änderungen vorbehalten
Technical changes reserved
Con riserva di modifiche
Con reserva de modificaciones
Sous réserve de modification

S.I.

50 Hz

Typ Type Tipo	Gewicht Weight Poids Peso (kg)
PE 13/6	121
PE 22/4	121
PE 29/4	121

60 Hz

Typ Type Tipo	Gewicht Weight Poids Peso (kg)
PE 28/4	131
PE 28/4W	140
PE 20/6	141
PE 20/6W	141
PE 35/4	131

	Part No.	Y(mm)
	DN 100	
	6 232 0652	
	6 232 0653	ø 110
	6 232 0654	ø 115
ASA	6 232 0664	
	6 232 0665	ø 115

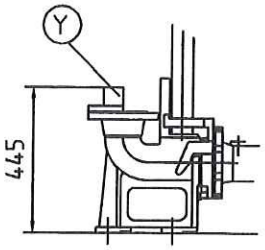

700×1400(two pumps)
700×700(one pump)
min. Schachtöffnung
min. Sump opening
Dimensioni min. botola
min. apertura del pozo
Largeur min. du puisard

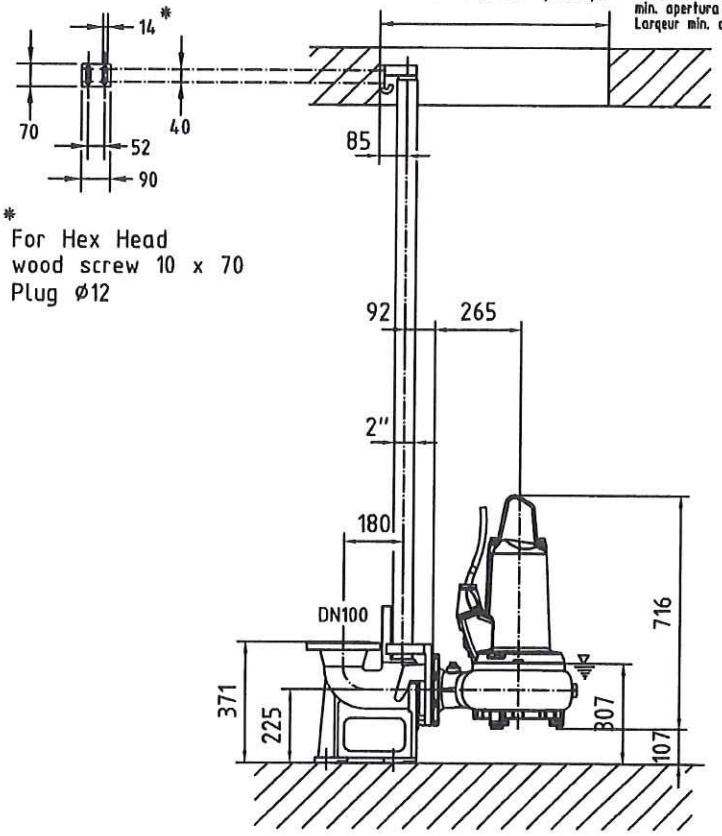

* For Hex Head wood screw 10 x 70 Plug ø12

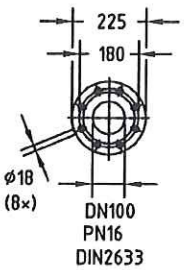

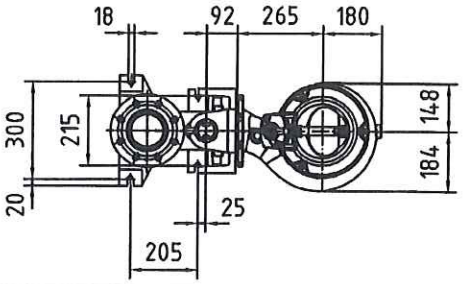

Gewicht: Beinhaltet Pumpe,Halterung(Fussstück) und Kabel (50 Hz = 10 m; 60 Hz = 15 m)
Weight: Includes pump, slider bracket and cable (50 Hz = 10 m; 60 Hz = 15 m)
Peso: Include pompa, pezzo intermedio a cavo (50 Hz = 10 m; 60 Hz = 15 m)
Peso: Incluye bomba, soporte deslizante y cable (50 Hz = 10 m; 60 Hz = 15 m)
Poids : incluant la pompe, le coulisseau et le câble (50 Hz = 10 m; 60 Hz = 15 m)

Guss-Allgemeintoleranzen nach DIN1680 - GTB16
General tolerances for castings in acc. to DIN1680-GTB16
Tolleranze generali delle fusioni secondo DIN1680-GTB16
Tolerancias generales para la fundición seg. de DIN1680-GTB16
Tolérance générale de la fonderie selon DIN1680-GTB16

D.O.O. VODOVOD I KANALIZACIJA DANILOVGRAD ViK
STRABAG STRABAG AG

SULZER

Massblatt XFP 100C-CB1 Nassinstallation
Dimension sheet WET-WELL Installation
Dimensioni Installazione sommersa
Hoja de dimensiones instalación sumergida
Plan d'encombrement Installation noyee

No: AN-M.22.558 - 03
Drawn: 12/05/09 D.Whelan
Issue Date: 09/05/2013
Änderungen vorbehalten
Technical changes reserved
Con riserva di modifiche
Con reserva de modificaciones
Sous réserve de modification

50 Hz

Typ Type Tipo	Gewicht Weight Poids Peso (lbs)
PE 13/6	267
PE 22/4	267
PE 29/4	267

60 Hz

Typ Type Tipo	Gewicht Weight Poids Peso (lbs)
PE 28/4	289
PE 28/4W	299
PE 20/6	311
PE 20/6W	311
PE 35/4	289

	Part No.	Y(mm)
	DN 100	
	6 232 0652	
	6 232 0653	ø 110
	6 232 0654	ø 115
ASA	6 232 0664	
	6 232 0665	ø 115

U.S.

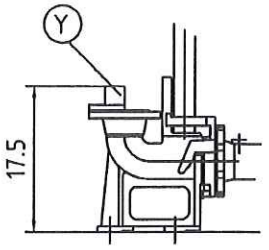

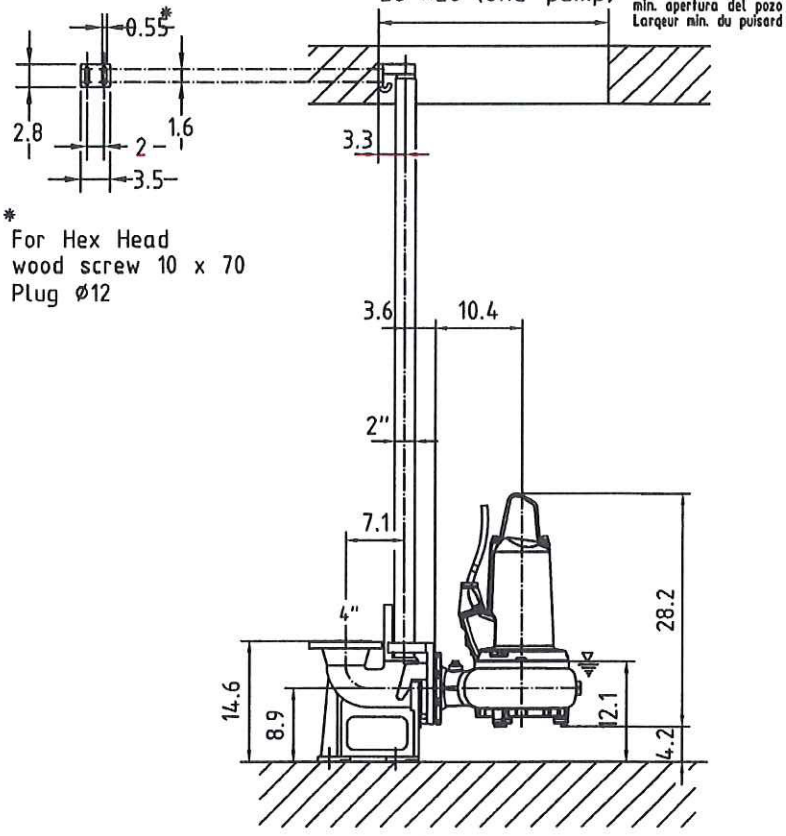

* For Hex Head wood screw 10 x 70 Plug ø12

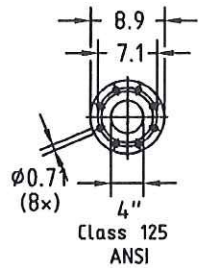

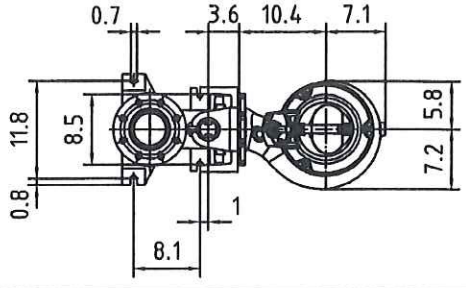

Gewicht: Beinhaltet Pumpe,Halterung(Fussstück) und Kabel (50 Hz = 10 m; 60 Hz = 15 m)
Weight: Includes pump, slider bracket and cable (50 Hz = 10 m; 60 Hz = 15 m)
Peso: Incluye bomba, soporte deslizante y cable (50 Hz = 10 m; 60 Hz = 15 m)
Peso: Include pompa, pezzo intermedio a cavo (50 Hz = 10 m; 60 Hz = 15 m)
Poids : incluant la pompe, le coulisseau et le câble (50 Hz = 10 m; 60 Hz = 15 m)

Guss-Allgemeintoleranzen nach DIN1680 - GTB16
General tolerances for castings in acc. to DIN1680-GTB16
Tolleranze generali delle fusioni secondo DIN1680-GTB16
Tolerancias generales para la fundición seg. de DIN1680-GTB16
Tolérance générale de la fonderie selon DIN1680-GTB16

P.O.O. VODOVOD I KANALIZACIJA DANILOVGRAD ViK
STRABAG STRABAG AG

SULZER

Massblatt XFP 100G-CB1 Nassinstallation
Dimension sheet WET-WELL Installation
Dimensioni Installazione sommersa
Hoja de dimensiones instalación sumergida
Plan d'encombrement Installation noyee

No: AN-M.22.589 - 03
Drawn: 05/08/10 D.Whelan
Issue Date: 29/05/2013
Änderungen vorbehalten
Technical changes reserved
Con riserva di modifiche
Con reserva de modificaciones
Sous réserve de modification

S.I.

50 Hz

Typ Type Tipo	Gewicht Weight Poids N.C.J. (kg)	Gewicht Weight Poids W.C.J. (kg)	Height H (mm)
PE 110/4	351	391	1282
PE 140/4	351	391	1282
PE 160/4	371	411	1282
PE 185/4	371	411	1282
PE 220/4	381	431	1322

60 Hz

Typ Type Tipo	Gewicht Weight Poids N.C.J. (kg)	Gewicht Weight Poids W.C.J. (kg)	Height H (mm)
PE 90/6	361	411	1282
PE 130/4	351	400	1282
PE 150/4	351	400	1282
PE 185/4	371	420	1282
PE 210/4	381	421	1282
PE 250/4	400	450	1322

N.C.J. = No Cooling Jacket
W.C.J. = With Cooling Jacket

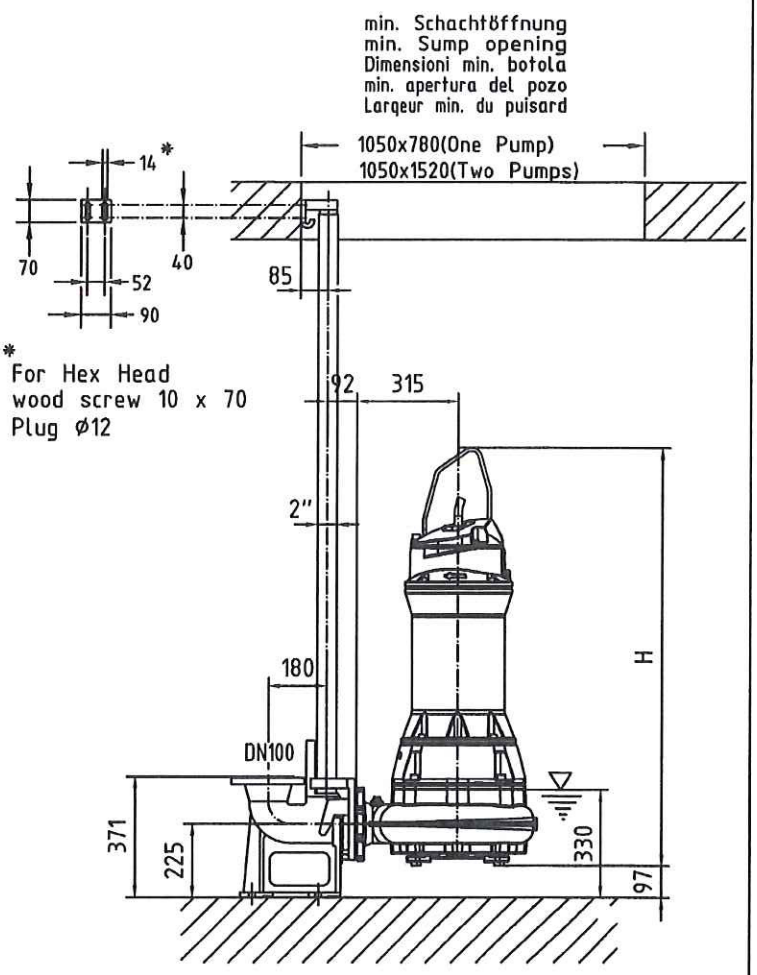

* For Hex Head wood screw 10 x 70 Plug ø12

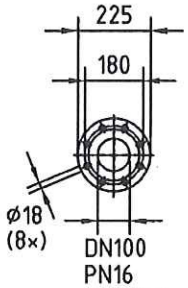

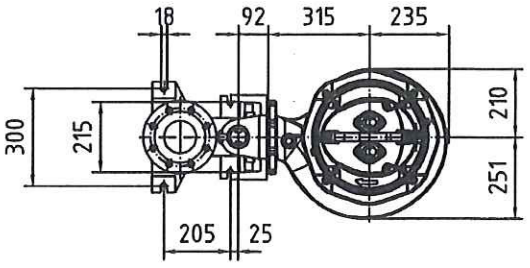

Gewicht: Beinhaltet Pumpe,Halterung(Fössstöck) und Kabel (50 Hz = 10 m; 60 Hz = 15 m)
Weight: includes pump, slider bracket and cable (50 Hz = 10 m; 60 Hz = 15 m)
Peso: include pompa, pezzo intermedio a cavo (50 Hz = 10 m; 60 Hz = 15 m)
Peso: incluye bomba, soporte deslizante y cable (50 Hz = 10 m; 60 Hz = 15 m)
Poids : incluant la pompe, le coulisseau et le câble (50 Hz = 10 m; 60 Hz = 15 m)

Guss-Allgemeintoleranzen nach DIN1680 - GTB16
General tolerances for castings in acc. to DIN1680-GTB16
Tolleranze generali delle fusioni secondo DIN1680-GTB16
Tolerancias generales para la fundición seg. de DIN1680-GTB16
Tolérance générale de la fonderie selon DIN1680-GTB16

VODOVOD I KANALIZACIJA Vik KNIN, OVGRAD
STRABAG STRABAG AG

SULZER	Massblatt XFP 100G-CB1 Nassinstallation Dimension sheet WET-WELL Installation Dimensioni Installazione sommersa Hoja de dimensiones instalacioń sumergida Plan d'encombrement Installation noyee	No: AN-M.22.589 - 03 Drawn: 05/08/10 D.Whelan Issue Date: 29/05/2013 Änderungen vorbehalten Technical changes reserved Con riserva di modifiche Con reserva de modificaciones Sous réserve de modification

50 Hz

U.S.

Typ Type Tipo	Gewicht Weight Poids N.C.J. (lbs)	Gewicht Weight Poids W.C.J. (lbs)	Height H (")
PE 110/4	774	863	50.5
PE 140/4	774	863	50.5
PE 160/4	818	907	50.5
PE 185/4	818	907	50.5
PE 220/4	840	951	52

60 Hz

Typ Type Tipo	Gewicht Weight Poids N.C.J. (lbs)	Gewicht Weight Poids W.C.J. (lbs)	Height H (")
PE 90/6	796	907	50.5
PE 130/4	774	882	50.5
PE 150/4	774	882	50.5
PE 185/4	818	926	50.5
PE 210/4	840	929	50.5
PE 250/4	882	992	52

N.C.J. = No Cooling Jacket
W.C.J. = With Cooling Jacket

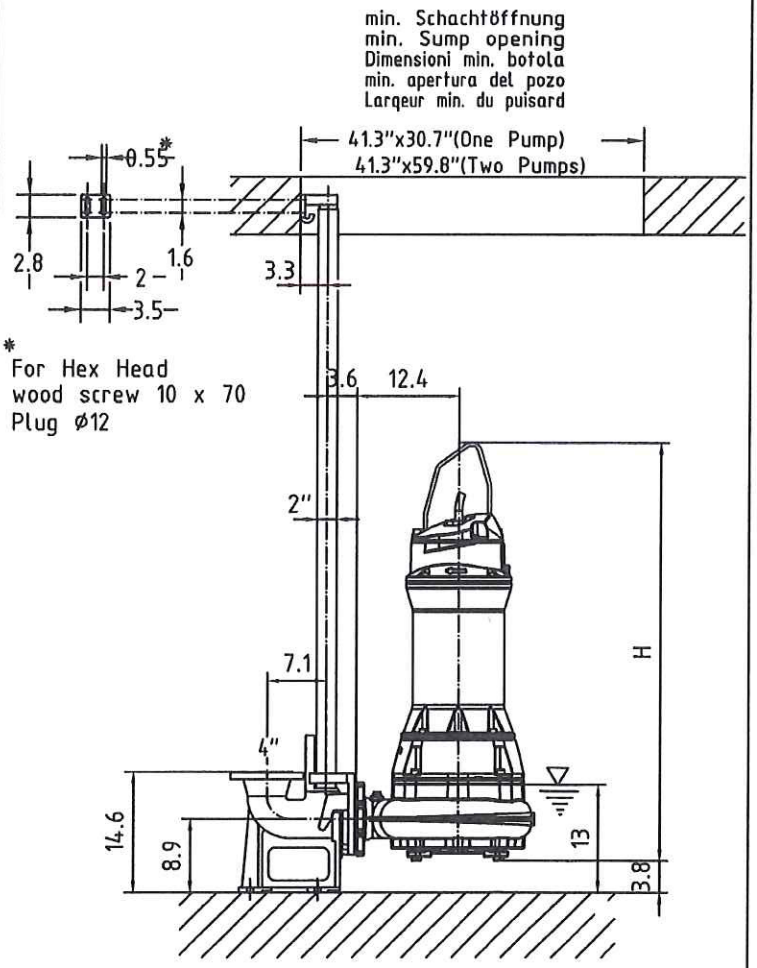

* For Hex Head wood screw 10 x 70 Plug ø12

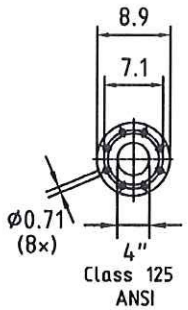

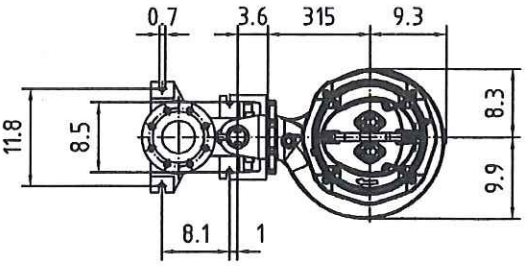

Gewicht: Beinhaltet Pumpe,Halterung(Fössstöck) und Kabel (50 Hz = 10 m; 60 Hz = 15 m)
Weight: Includes pump, slider bracket and cable (50 Hz = 10 m; 60 Hz = 15 m)
Peso: include pompa, pezzo intermedio a cavo (50 Hz = 10 m; 60 Hz = 15 m)
Peso: Incluye bomba, soporte deslizante y cable (50 Hz = 10 m; 60 Hz = 15 m)
Poids : incluant la pompe, le coulisseau et le câble (50 Hz = 10 m; 60 Hz = 15 m)

Guss-Allgemeintoleranzen nach DIN1680 - GTB16
General tolerances for castings in acc. to DIN1680-GTB16
Tolleranze generali delle fusioni secondo DIN1680-GTB16
Tolerancias generales para la fundición seg. de DIN1680-GTB16
Tolérance générale de la fonderie selon DIN1680-GTB16

VIK VODOVOD I KANALIZACIJA DANILOVGRAD
STRABAG STRABAG AG

SULZER

XFP100G CB1 50HZ

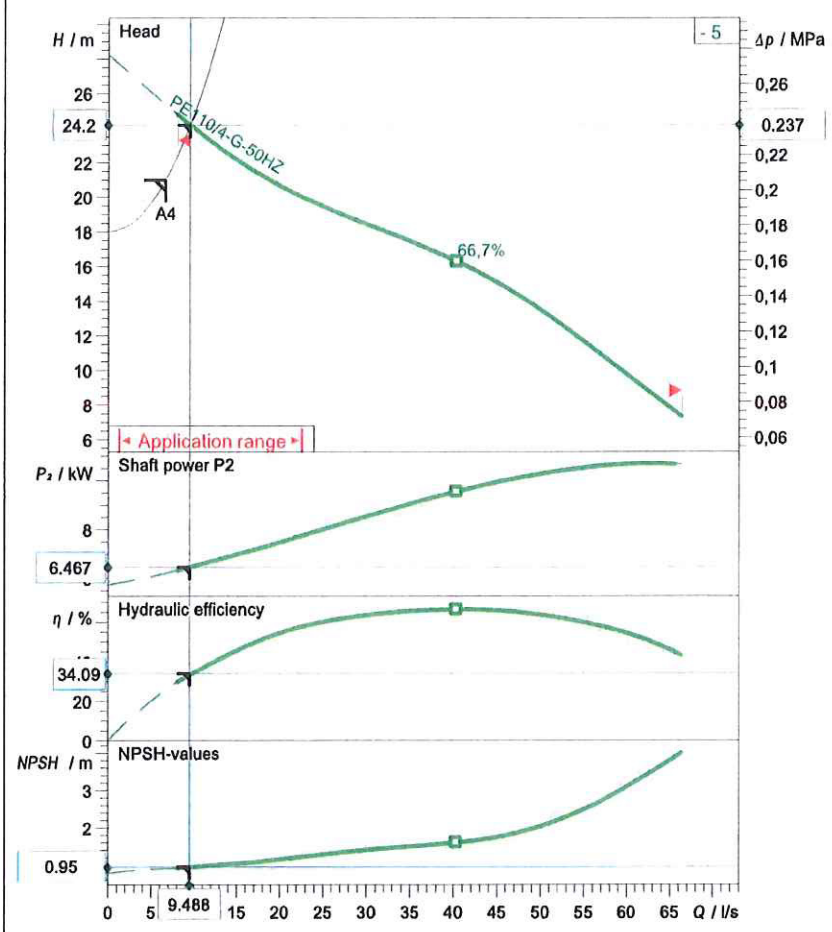

Testnorm
ISO 9906: 2012, HI 11.6/14.6 Gr 2B

2017-12-04

Operating data specification			
Flow	9,49 l/s	Head	24,2 m
Efficiency	34,1 %	Shaft power	6,47 kW
NPSH	0,95 m	Fluid	Water
Temperature	20 °C	Nature of system	Single head pump
No. of pumps	1		
Pump data			
Type	XFP100G CB1 50HZ	Make	SULZER
Series	XFP PE1-PE3	Impeller	Contrablock Plus impeller, 1 vane
N° of vanes	1	Impeller size	260 mm
Free passage	100 mm	Suction flange	DN100
Discharge flange	DN100	Type of installation	
Moment of inertia	0,0789 kg m²		Not chosen
Motor data			
Rated voltage	400 V	Frequency	50 Hz
Rated power P2	11 kW	Nominal Speed	1480 1/min
Number of poles	4	Efficiency	91,4 %
Power factor	0,743	Rated current	23,4 A
Starting current	223 A	Rated torque	71 Nm
Starting torque	299 Nm	Degree of protection	IP 68
Insulation class	H	No. starts per hour	15

Sulzer reserves the right to change any data and dimensions without prior notice
and can not be held responsible for the use of information contained in this software.

Spaix® 4, Version 4.3.4 - 2017/03/02 (Build 576)
Data version Mar-2017

D.O.O. VODOVOD I KANALIZACIJA VIK VOVGRAD

STRABAG AG

Curve number	Pump performance curves	SULZER
Reference curve XFP 100G 50HZ	XFP100G CB1 50HZ	

			Discharge	Frequency
			DN100	50 Hz
Density	Viscosity	Testnorm	Rated speed	Date
998,3 kg/m³	1,005 mm²/s	ISO 9906: 2012, HI 11.6/14.6 Gr 2B	1489 1/min	2017-12-04
Flow	Head	Rated power	Hydraulic efficiency	NPSH
9,49 l/s	24,2 m	6,47 kW	34,1 %	0,95 m

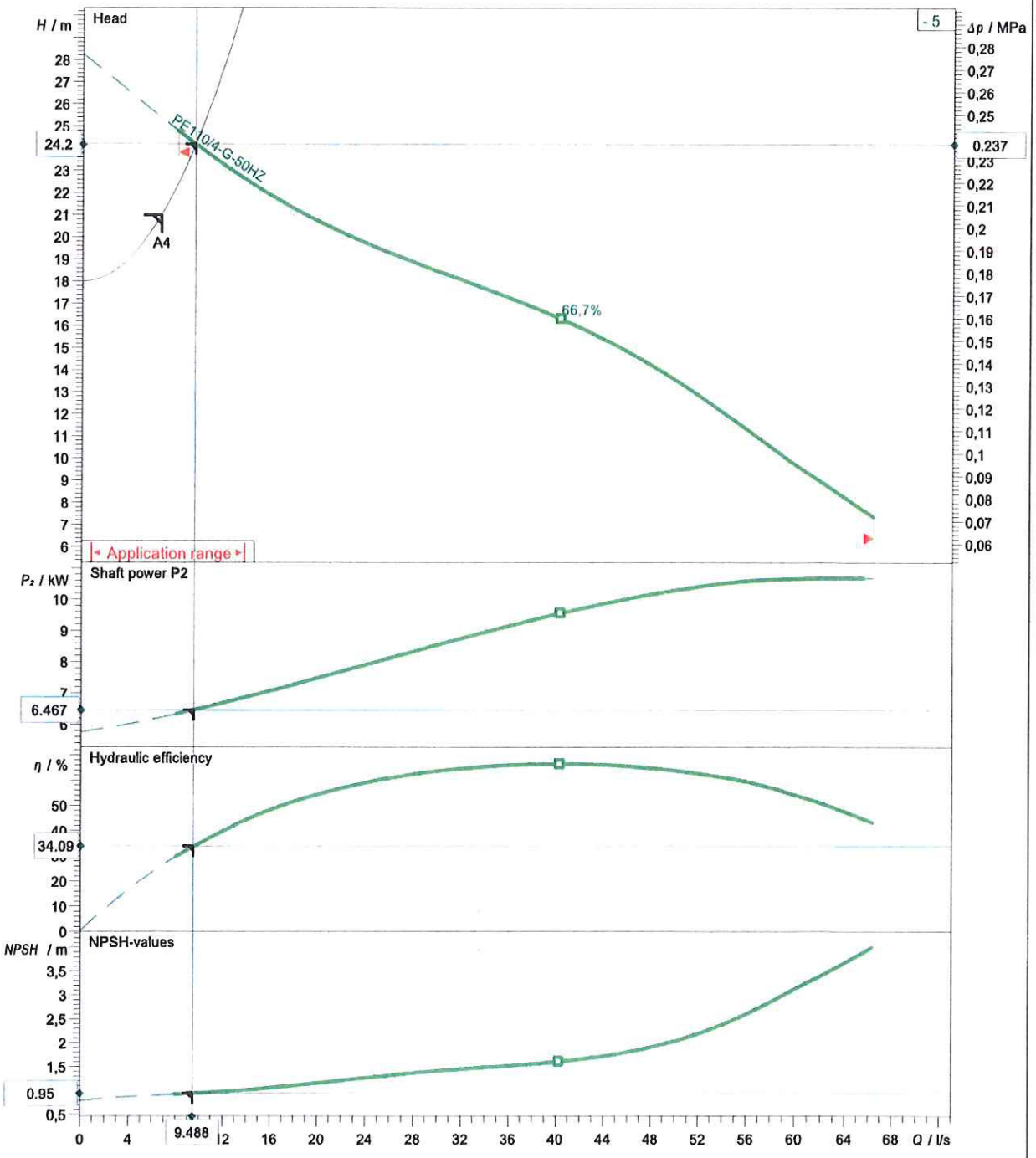

Impeller size	N° of vanes	Impeller	Solid size	Revision
260 mm	1	Contrablock Plus impeller, 1 vane	100 mm	

Sulzer reserves the right to change any data and dimensions without prior notice
and can not be held responsible for the use of information contained in this software.

Spaix® 4, Version 4.3.4 - 2017/03/02 (Build 576)
Data version Mar-2017

D.O.O. VODOVOD I KANALIZACIJA ViK PANILOVGRAD

STRABAG
STRABAG AG

Frequency	Motor performance curve	SULZER
50 Hz	PE110/4-G-50HZ	

Rated power	Service factor	Nominal Speed	Number of poles	Rated voltage	Date
11 kW	1	1480 1/min	4	400 V	2017-12-04

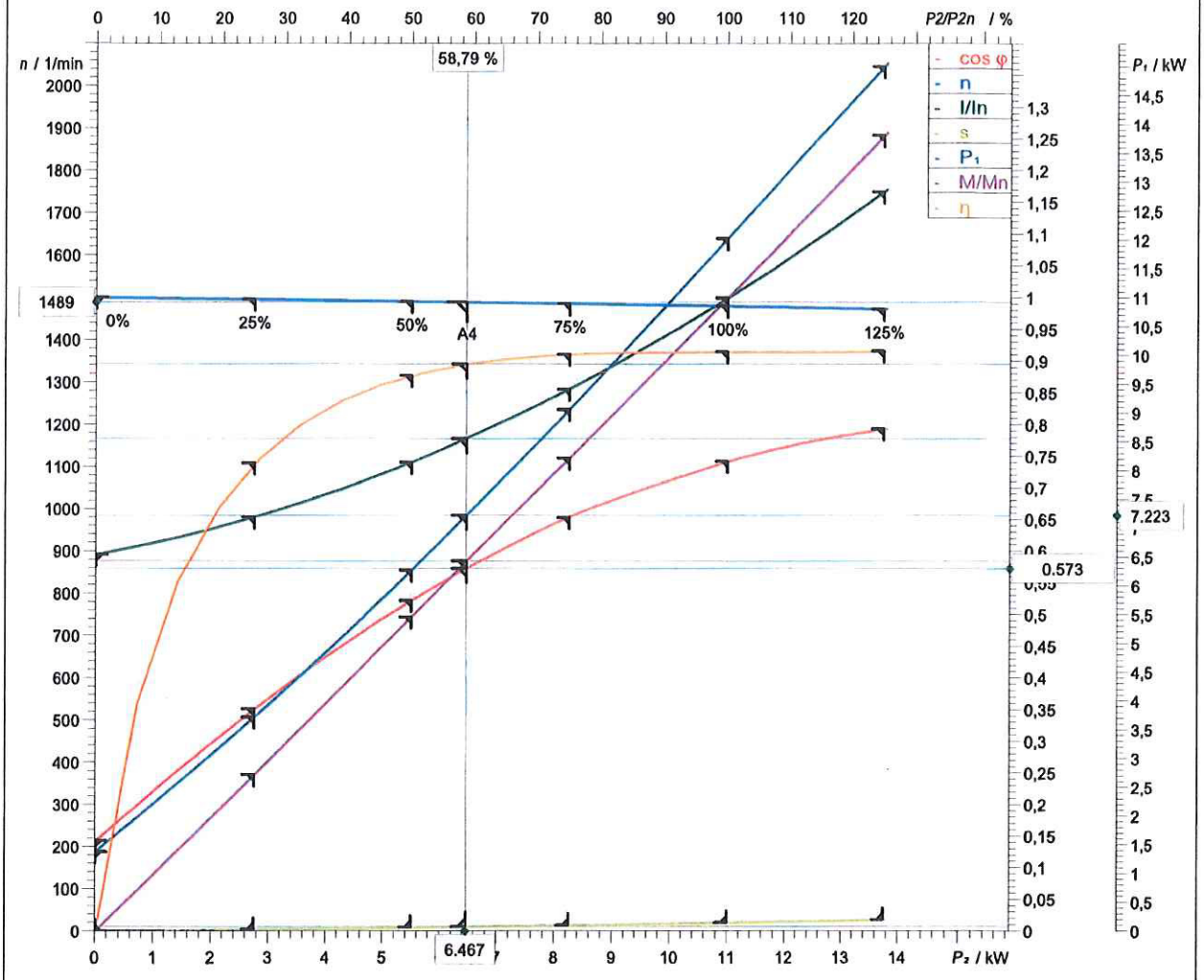

Symbol	No load	25 %	50 %	75 %	100 %	125 %
P_2 / kW	0	2,75	5,5	8,25	11	13,75
P_1 / kW	1,377	3,719	6,268	9,059	12,02	15,01
η / %	0	73,94	87,75	91,07	91,48	91,63
n / 1/min	1500	1496	1491	1486	1480	1473
cos φ	0,1429	0,351	0,5221	0,6529	0,7426	0,7935
I / A	13,91	15,3	17,33	20,03	23,37	27,3
s / %	0	0,2672	0,588	0,9387	1,327	1,792
M / Nm	0	17,55	35,22	53,02	70,97	89,13

Tolerance according to VDE 0530 T1 12.84 for rated power

Starting current	Starting torque	Moment of inertia	No. starts per hour
223 A	299 Nm	0,174 kg m²	15

Sulzer reserves the right to change any data and dimensions without prior notice
and can not be held responsible for the use of information contained in this software.

Spaix® 4, Version 4.3.4 - 2017/03/02 (Build 576)
Data version Mar-2017

D.O.O. VODOVOD I KANALIZACIJA DANILOVGRAD

STRABAG
STRABAG AG

SULZER

Massblatt XFP 150G–CB1 Nassinstallation	No: AN–M.22.594 – 05
Dimension sheet WET–WELL Installation	Drawn: 05/08/10 D.Whelan
Dimensioni Installazione sommersa	Issue Date: 01/07/2016
Hoja de dimensiones instalácion sumergida	Änderungen vorbehalten Technical changes reserved Con riserva di modifiche
Plan d'encombrement Installation noyee	Con reserva de modificaciones Sous réserve de modification

S.I.

50 Hz

Typ Type Tipo	Gewicht Weight Poids N.C.J. (kg)	Gewicht Weight Poids W.C.J. (kg)	Height H (mm)
PE 110/4	357	407	1297
PE 140/4	357	407	1297
PE 160/4	387	427	1297
PE 185/4	387	427	1297
PE 220/4	397	447	1337

60 Hz

Typ Type Tipo	Gewicht Weight Poids N.C.J. (kg)	Gewicht Weight Poids W.C.J. (kg)	Height H (mm)
PE 110/6	367	407	1297
PE 130/4	367	417	1297
PE 150/4	367	417	1297
PE 185/4	397	437	1297
PE 210/4	397	447	1297
PE 250/4	416	476	1337

N.C.J. = No Cooling Jacket
W.C.J. = With Cooling Jacket

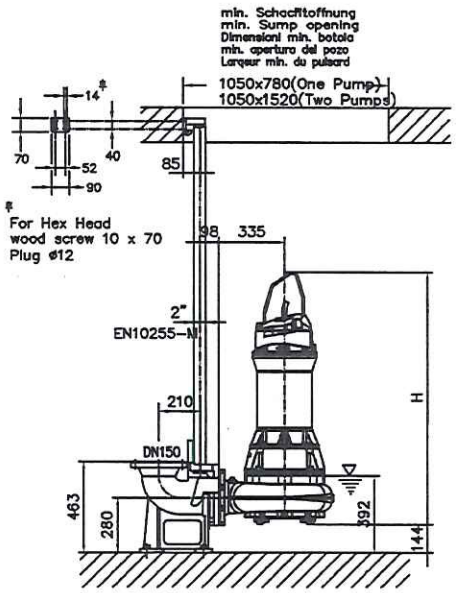

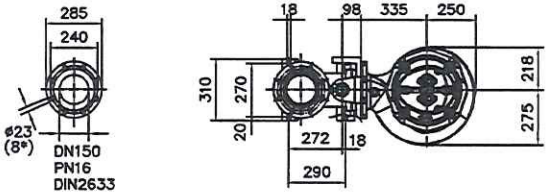

Gewicht: Behälter Pumpe,Halterung(Fussstück) und Kabel (50 Hz = 10 m; 60 Hz = 15 m)
Weight: Includes pump, slider bracket and cable (50 Hz = 10 m; 60 Hz = 15 m)
Peso: Include pompa, pezzo intermedio e cavo (50 Hz = 10 m; 60 Hz = 15 m)
Peso: Incluye bomba, soporte deslizante y cable (50 Hz = 10 m; 60 Hz = 15 m)
Poids : Incluant la pompe, le coulisseau et le cable (50 Hz = 10 m; 60 Hz = 15 m)

Guss–Allgemeintoleranzen nach DIN1680 – GTB16
General tolerances for castings in acc. to DIN1680–GTB16
Tolleranze generali delle fusioni secondo DIN1680–GTB16
Tolerancias generales para la fundicion seg. de DIN1680–GTB16
Tolérance générale de la fonderie selon DIN1680–GTB16

SULZER

Massblatt XFP 150G–CB1 Nassinstallation	No: AN–M.22.594 – 05
Dimension sheet WET–WELL Installation	Drawn: 05/08/10 D.Whelan
Dimensioni Installazione sommersa	Issue Date: 01/07/2016
Hoja de dimensiones instalácion sumergida	Änderungen vorbehalten Technical changes reserved Con riserva di modifiche
Plan d'encombrement Installation noyee	Con reserva de modificaciones Sous réserve de modification

U.S.

50 Hz

Typ Type Tipo	Gewicht Weight Poids N.C.J. (lbs)	Gewicht Weight Poids W.C.J. (lbs)	Height H (")
PE 110/4	788	898	51.1
PE 140/4	788	898	51.1
PE 160/4	854	942	51.1
PE 185/4	854	942	51.1
PE 220/4	876	986	52.6

60 Hz

Typ Type Tipo	Gewicht Weight Poids N.C.J. (lbs)	Gewicht Weight Poids W.C.J. (lbs)	Height H (")
PE 110/6	810	898	51.1
PE 130/4	810	920	51.1
PE 150/4	810	920	51.1
PE 185/4	854	876	51.1
PE 210/4	876	986	51.1
PE 250/4	917	1050	52.7

N.C.J. = No Cooling Jacket
W.C.J. = With Cooling Jacket

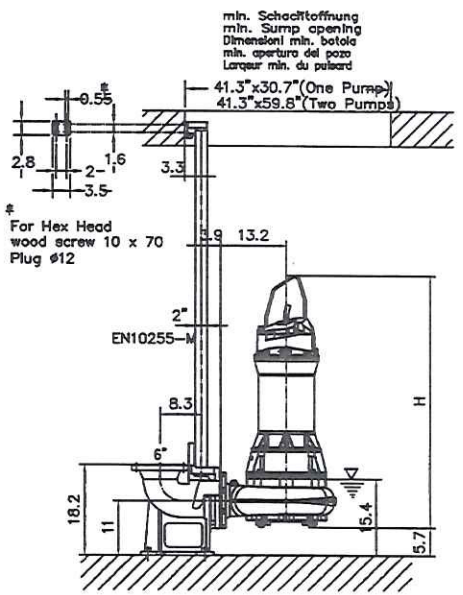

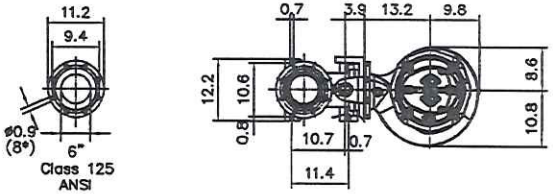

Gewicht: Behälter Pumpe,Halterung(Fussstück) und Kabel (50 Hz = 10 m; 60 Hz = 15 m)
Weight: Includes pump, slider bracket and cable (50 Hz = 10 m; 60 Hz = 15 m)
Peso: Include pompa, pezzo intermedio e cavo (50 Hz = 10 m; 60 Hz = 15 m)
Peso: Incluye bomba, soporte deslizante y cable (50 Hz = 10 m; 60 Hz = 15 m)
Poids : Incluant la pompe, le coulisseau et le cable (50 Hz = 10 m; 60 Hz = 15 m)

Guss–Allgemeintoleranzen nach DIN1680 – GTB16
General tolerances for castings in acc. to DIN1680–GTB16
Tolleranze generali delle fusioni secondo DIN1680–GTB16
Tolerancias generales para la fundicion seg. de DIN1680–GTB16
Tolérance générale de la fonderie selon DIN1680–GTB16

SULZER

XFP150G CB1 50HZ

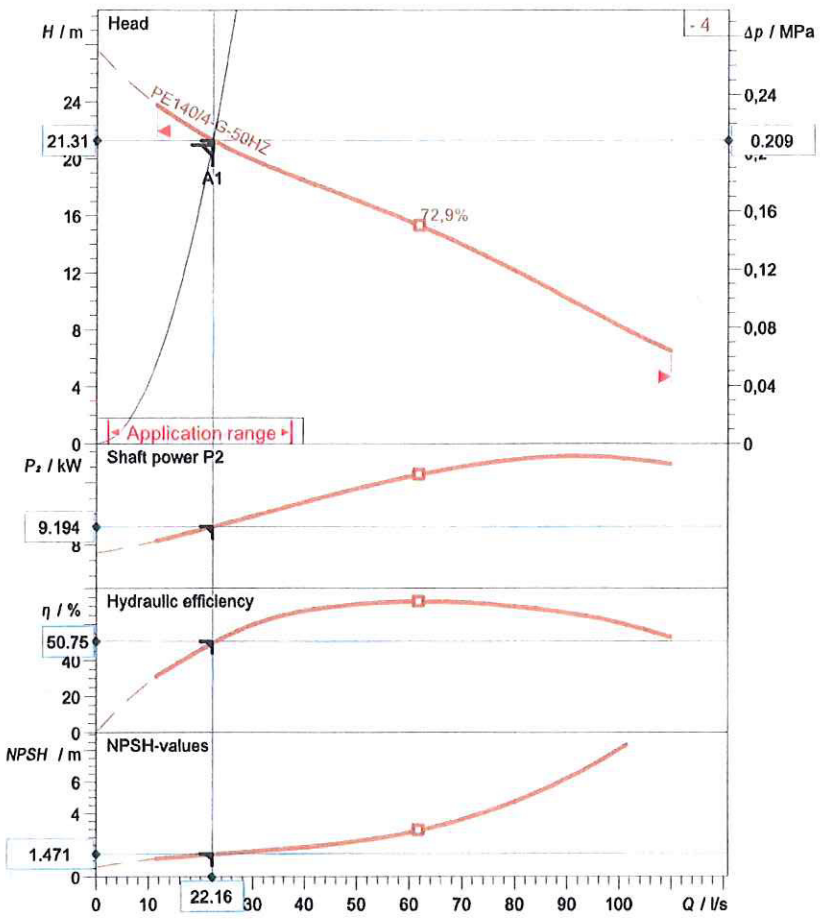

Testnorm
ISO 9906: 2012, HI 11.6/14.6 Gr 2B

2017-12-04

Operating data specification			
Flow	22,2 l/s	Head	21,3 m
Efficiency	50,8 %	Shaft power	9,19 kW
NPSH	1,47 m	Fluid	Water
Temperature	20 °C	Nature of system	Single head pump
No. of pumps	1		
Pump data			
Type	XFP150G CB1 50HZ	Make	SULZER
Series	XFP PE1-PE3	Impeller	Contrablock Plus impeller, 1 vane
N° of vanes	1	Impeller size	265 mm
Free passage	100 mm	Suction flange	DN150
Discharge flange	DN150	Type of installation	
Moment of inertia	0,0944 kg m²		Not chosen
Motor data			
Rated voltage	400 V	Frequency	50 Hz
Rated power P2	14 kW	Nominal Speed	1470 1/min
Number of poles	4	Efficiency	91,9 %
Power factor	0,792	Rated current	27,8 A
Starting current	223 A	Rated torque	90,8 Nm
Starting torque	299 Nm	Degree of protection	IP 68
Insulation class	H	No. starts per hour	15

Sulzer reserves the right to change any data and dimensions without prior notice and can not be held responsible for the use of information contained in this software.

D.O.O. VODOVODI I KANALIZACIJA VIK KANJIŽOVGRAD

STRABAG AG

Curve number	Pump performance curves	SULZER
Reference curve XFP 150G CB 50HZ	XFP150G CB1 50HZ	

			Discharge	Frequency
			DN150	50 Hz
Density	Viscosity	Testnorm	Rated speed	Date
998,3 kg/m³	1,005 mm²/s	ISO 9906: 2012, HI 11.6/14.6 Gr 2B	1484 1/min	2017-12-04
Flow	Head	Rated power	Hydraulic efficiency	NPSH
22,2 l/s	21,3 m	9,19 kW	50,8 %	1,47 m

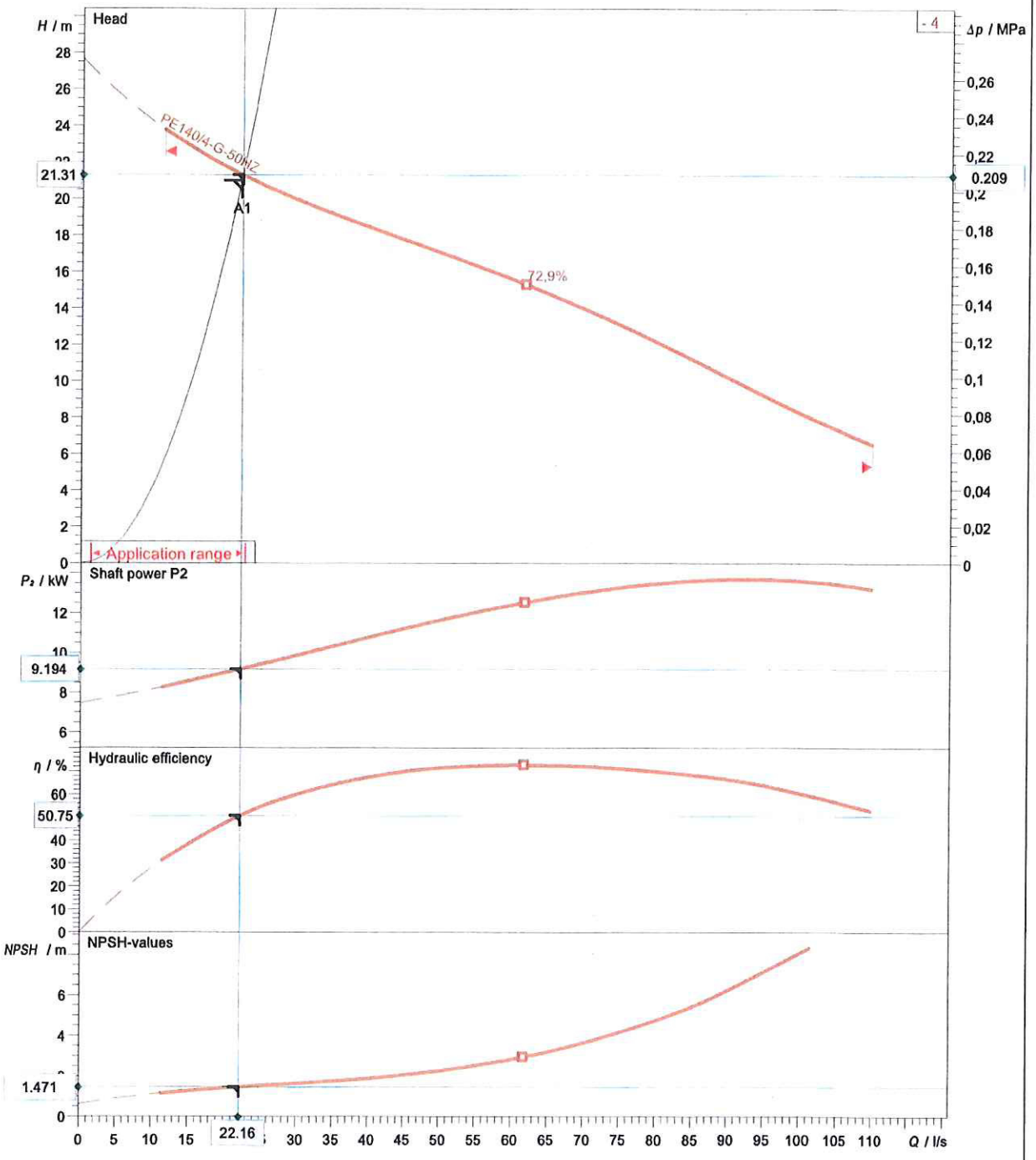

Impeller size	N° of vanes	Impeller	Solid size	Revision
265 mm	1	Contrablock Plus impeller, 1 vane	100 mm	

Sulzer reserves the right to change any data and dimensions without prior notice
and can not be held responsible for the use of information contained in this software.

Spaix® 4, Version 4.3.4 - 2017/03/02 (Build 576)
Data version Mar-2017

D.O.O. VODOVOD I KANALIZACIJA DANILOVGRAD

STRABAG
STRABAG AG

Frequency 50 Hz	**Motor performance curve** PE140/4-G-50HZ	SULZER

Rated power	Service factor	Nominal Speed	Number of poles	Rated voltage	Date
14 kW	1	1470 1/min	4	400 V	2017-12-04

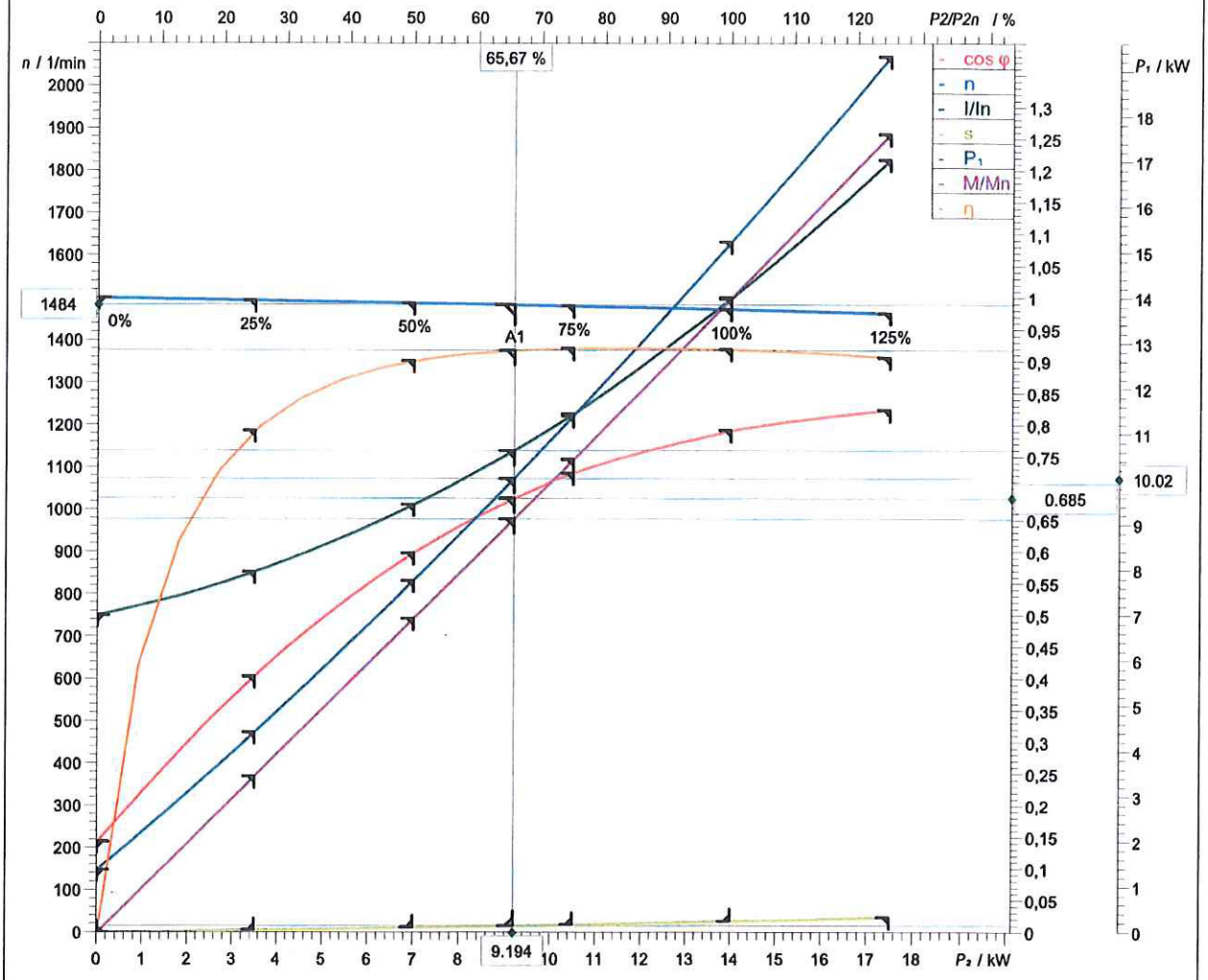

Symbol	No load	25 %	50 %	75 %	100 %	125 %
P_2 / kW	0	3,5	7	10,5	14	17,5
P_1 / kW	1,38	4,423	7,767	11,4	15,23	19,31
η / %	0	79,14	90,12	92,08	91,9	90,61
n / 1/min	1500	1494	1488	1481	1473	1464
cos φ	0,1432	0,404	0,5981	0,7239	0,7918	0,8238
I / A	13,91	15,8	18,75	22,73	27,77	33,84
s / %	0,0002646	0,3987	0,8026	1,264	1,801	2,4
M / Nm	0	22,37	44,92	67,7	90,76	114,1

Tolerance according to VDE 0530 T1 12.84 for rated power

Starting current	Starting torque	Moment of inertia	No. starts per hour
223 A	299 Nm	0,174 kg m²	15

Sulzer reserves the right to change any data and dimensions without prior notice
and can not be held responsible for the use of information contained in this software.

Spaix® 4, Version 4.3.4 - 2017/03/02 (Build 576)
Data version Mar-2017

D.O.O. VODOVOD I KANALIZACIJA VIK DANILOVGRAD
STRABAG AG

Pump Type	AS
Pump Name	AS0830
Impeller	AS0830.160
Motor	S13/4

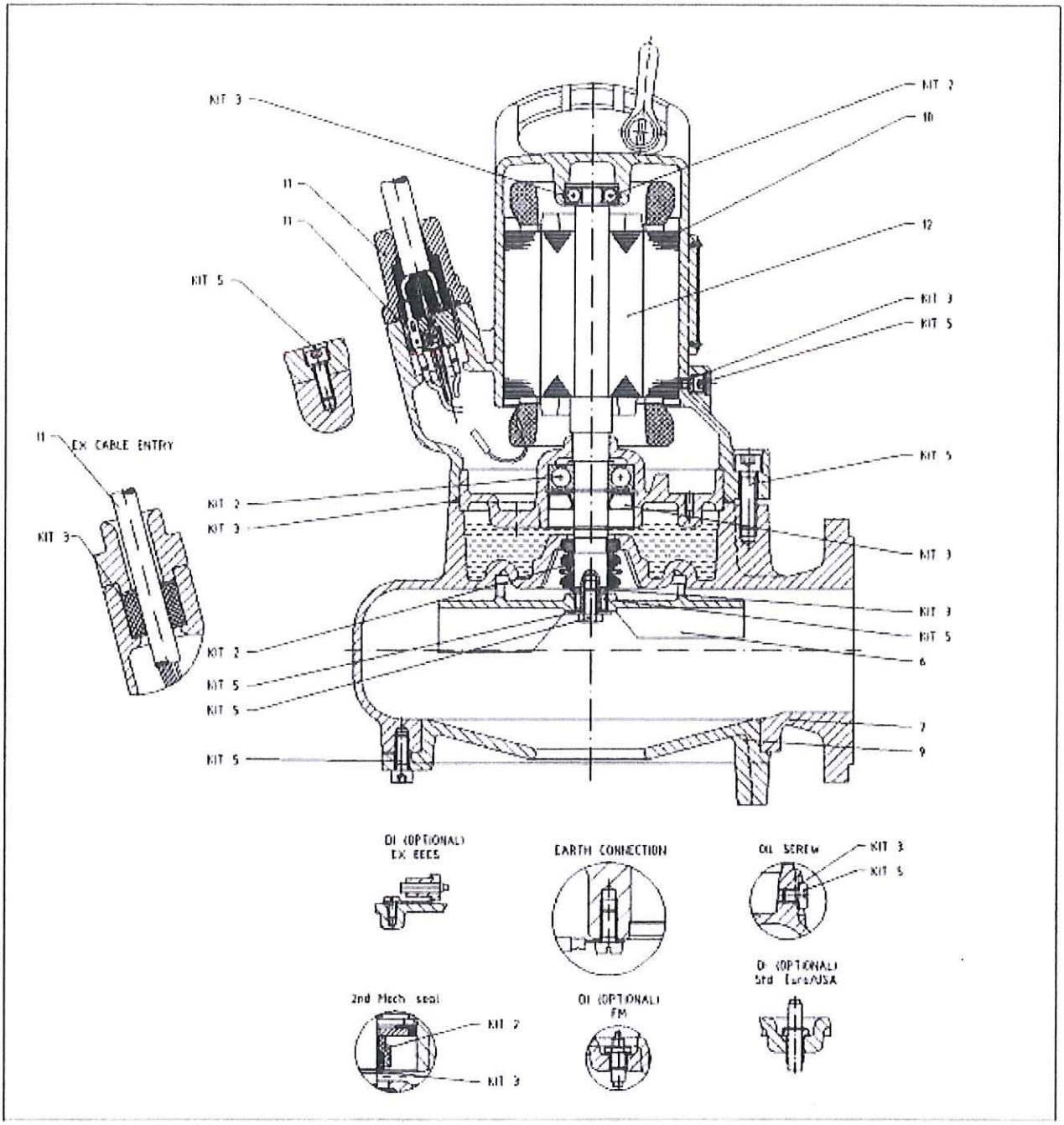

ABS reserves the right to alter specifications due to technical developments

D.O.O. VODOVOD I KANALIZACIJA DANILOVGRAD ViK

STRABAG AG

HYDROVISION
WE ARE ENGINEERS

Hydrovision d.o.o.
Timočke divizije 7/20
11000 Beograd
Tel/Fax. 011 394 79 96
email. office@hydrovision.rs

www.hydrovision.rs
Račun 105-11081-57
PIB 108655759
MB 21042358
ŠIFRA 4690

Date 05.12.2017.

VOLUME I.vi

MANUFACTURER'S AUTHORISATION FORM

TO:

D.O.O. "Vodovod i kanalizacija" Danilovgrad

Caja Scepanovica bb Danilovgrad

81410 State of Montenegro

WHEREAS HYDROVISION DOO, Timocke divizije 7/20, 11000 Belgrade who is official representative for Serbia and Montenegro of SULZER AUSTRIA GmbH who are established and reputable manufacturers of electrical and SCADA components for sewerage pumping stations, having factories at Vadstena Sweden; Wexford Ireland do hereby authorize STRABAG AG Zetskih vladara br.5 / 81000 Podgorica / Montenegro to submit a tender, and subsequently negotiate and sign the Contract with you for the above goods manufactured by us.

We hereby extend our full guarantee and warranty as per Clause 23 of the General Conditions of Contract for the goods offered for supply by the above firm in response to this Invitation for Tenders.

We hereby confirm that authorization is related to equipment specified under chapter 4.3 of VOLUME III, PART III.I TECHNICAL SPECIFICATIONS.

HYDROVISION DOO BEOGRAD - VOŽDOVAC

Nenad Žarkić, Direktor

D.O.O. VODOVOD I KANALIZACIJA VIK DANILOVGRAD

STRABAG STRABAG AG

Pump Type AS0830
Motor S13/4
Impeller AS0830.160

1.	Work Shop Kit	61705208	KIT W/S AS0830.160-S13/4	
2.	Repair Kit	61705018	KIT REPAIR AS S10/4-18/2 MM	
	Repair Kit	61705019	KIT REPAIR AS S10/4-18/2 MM VITON	
	Repair Kit	61705020	KIT REPAIR AS S22/4-30/2 MM	
	Repair Kit	61705021	KIT REPAIR AS S22/4-30/2 MM VITON	
	Repair Kit	61705032	KIT REPAIR AS S10/4-18/2 LIP SEAL	
	Repair Kit	61705033	KIT REPAIR AS S10/4-18/2 LIP SEAL VITON	
	Repair Kit	61705034	KIT REPAIR AS S22/4-30/2 LIP SEAL	
	Repair Kit	61705035	KIT REPAIR AS S22/4-30/2 LIP SEAL VITON	
3.	Seal Kit	61195072	SEAL KIT AS S10-18/2 LIP SEAL	
	Seal Kit	61195073	SEAL KIT AS S21-30/2 LIP SEAL	
	Seal Kit	61195076	SEAL KIT AS S10-18/2 LIP SEAL VITON	
	Seal Kit	61195077	SEAL KIT AS S21-30/2 LIP SEAL VITON	
4.	Hydraulic Kit	61705673	KIT HYDS. AS0630/830.160 WPFHA	
	Hydraulic Kit	61705684	KIT HYDS. AS0830.160 WP STD	
5.	Screw Kit	62615034	KIT SCREW W/S AS0830 S10-S13	
	Screw Kit	62615035	KIT SCREW W/S AS0830 S22	
6.	Impeller	35075121	AS0830 S13/4 D160 GG	
7.	Volute	31055019	VOLUTE AS0830 GG	
9.	Wear Plate	31060585	WEAR PLATE AS0830/AV14-4 GG	
	Wear Plate	31065021	WEAR PLATE AS0630/0830FHA GG	
10.	Stator	65005342	S13-16/4 400/3/50, 460/3/60	
	Stator	65005458	S13/4 230/3/50	
	Stator	65005459	S13-16/4 500/3/50, 575/3/60	
11.	Cable	43025323	7G1.5 10m D EasyFit	With O-Ring
	Cable	43025325	7G1.5 20m D EasyFit	With O-Ring
	Cable	43025327	7G1.5 30m D EasyFit	With O-Ring
	Cable	43025334	7G1.5 10m W EasyFit	With O-Ring
	Cable	43025335	7G1.5 20m W EasyFit	With O-Ring
	Cable	43025336	7G1.5 30m W EasyFit	With O-Ring
	Cable	43025339	4G1.5 10m EasyFit	With O-Ring
	Cable	43025340	4G1.5 20m EasyFit	With O-Ring
	Cable	43025341	4G1.5 30m EasyFit	With O-Ring
	Cable	43025393	4G1.5 40m EasyFit	With O-Ring
	Cable	43025393	4G1.5 40m EasyFit	With O-Ring
	Cable	43025399	4G1.5 50m EasyFit	With O-Ring
	Cable	43025535	7G1.5 10.5m TECWATER D	
	Cable	43025536	7G1.5 20.5m TECWATER D	
	Cable	43025537	7G1.5 30.5m TECWATER D	
	Cable	43025538	7G1.5 40.5m TECWATER D	
	Cable	43025539	7G1.5 50.5m TECWATER D	
12.	Rotor Asssembly	65015079	S10/4,S13/4 1.4021	
	Rotor Asssembly	65015083	S10/4,S13/4 1.4401	
	Rotor Asssembly	65015164	S13/4,S16/4 1.4021	

ABS reserves the right to alter specifications due to technical develop

D.O.O. VODOVOD I KANALIZACIJA ViK DANILOVGRAD

STRABAG AG

Pump Type	AS0830
Motor	S13/4
Impeller	AS0830.160

Rotor Asssembly	65015174	S13/4 1.4401

ABS reserves the right to alter specifications due to technical develop

D.O.O. VODOVOD I KANALIZACIJA VIK NIKŠIĆ DANILOVGRAD

STRABAG
STRABAG AG

XFP 100C-CB1
PE29/4
XFP100C CB1.2

1.	Repair Kit	61705075	KIT REPAIR XFP PE1 CB	
	Repair Kit	61705081	KIT REPAIR XFP PE1 CB US	
2.	Seal Kit	61195127	SEAL KIT XFP PE1	
3.	Hydraulic Kit	61705805	KIT HYDS.XFP100C CB1.2	
4.	Screw Kit	62615057	KIT SCREW W/S XFP PE1 CB	
5.	Impeller	35075589	XFP80/100C CB1.2 D195 GG	
6.	Volute	31055124	VOLUTE XFP100C GG	
7.	Wear Plate	31065084	WEAR PLATE XFP100C GG	
8.	Stator	65005901	PE29/4 400/3/50	
	Stator	65005907	PE29/4 230/3/50	
	Stator	65005908	PE29/4 500/3/50,PE22/4,PE28/4,PE35/4 6	
	Stator	65005949	PE29/4 400/3/50 PTC	
9.	Cable	43025510	7G1.5 10m PE	
	Cable	43025511	7G1.5 20m PE	
	Cable	43025512	7G1.5 30m PE	
	Cable	43025580	4G1.5+3x.5EMC 10m PE	
	Cable	43025581	4G1.5+3x.5EMC 20m PE	
	Cable	43025582	4G1.5+3x.5EMC 30m PE	
10.	CableAssembly	63025510	CABLE ASY.PE 7G1.5 10m	
	CableAssembly	63025511	CABLE ASY.PE 7G1.5 20m	
	CableAssembly	63025512	CABLE ASY.PE 7G1.5 30m	
	CableAssembly	63025513	CABLE ASY.PE 7G1.5 40m	
	CableAssembly	63025514	CABLE ASY.PE 7G1.5 50m	
	CableAssembly	63025580	CABLE ASY.PE 4G1.5+3x.5 EMC 10m	
	CableAssembly	63025581	CABLE ASY.PE 4G1.5+3x.5 EMC 20m	
	CableAssembly	63025582	CABLE ASY.PE 4G1.5+3x.5 EMC 30m	
11.	Rotor Asssembly	65015291	PE29/4 50Hz, PE22/4,PE28/4,PE35/4 1.4021	
12.	MotorHousing	31005077	PE13/6,PE15/4,PE22/4,PE29/4,PE30/2,PE40/2,PE20/6,P	
13.	BearingHousing	31155072	BEARING HSG.PE1 GG	
14.	SealHoldingPlate	31165021	SEAL HOLD.PLATE PE1 W/BUSH	
15.	TransitionPiece	31405025	TRANS.PIECE XFP PE1	
16.	Other Parts	31325016	Cable cap	PE1 + PE2
	Other Parts	31325017	Cable cap	PE2 Large (AWG Cable)
	Other Parts	31325018	Cable cap	PE3 + PE3.5 (D40 ID26)
	Other Parts	31325019	Cable cap	PE3 + PE3.5 (D50 ID34)
	Other Parts	42175000	Clamp strap earth	
	Other Parts	43435000	Connection support	
	Other Parts	12180172	Connectors	
	Other Parts	42015037	Deflector	PE3 + PE3.5
	Other Parts	61035006	DI-probe complete	PE1,PE2
	Other Parts	61035007	DI-probe complete	PE3

ABS reserves the right to alter specifications due to technical develop

D.O.O. VODOVOD I KANALIZACIJA VIK DANILOVGRAD

STRABAG AG

XFP 100C-CB1
PE29/4
XFP100C CB1.2

Other Parts	31995021	Earth lead	
Other Parts	41425106	Lifting hoop	PE1
Other Parts	41425107	Lifting hoop	PE2
Other Parts	41425115	Lifting hoop	PE3 + PE3.5
Other Parts	11560018	Plug screw	Fitting volute
Other Parts	42965004	Pressure screw	
Other Parts	12200020	Terminal block	PE3 (6 POLE M6)
Other Parts	13430268	Terminal block	PE3 (6xPWR-90A+3xCTL)
Other Parts	61135010	Terminal block	PE1 + PE2 (10 POLE)

ABS reserves the right to alter specifications due to technical develop

D.O.O. VODOVOD I KANALIZACIJA ViK DANILOVGRAD

STRABAG
STRABAG AG

XFP

XFP 100C-CB1

XFP100C CB1.2

PE29/4

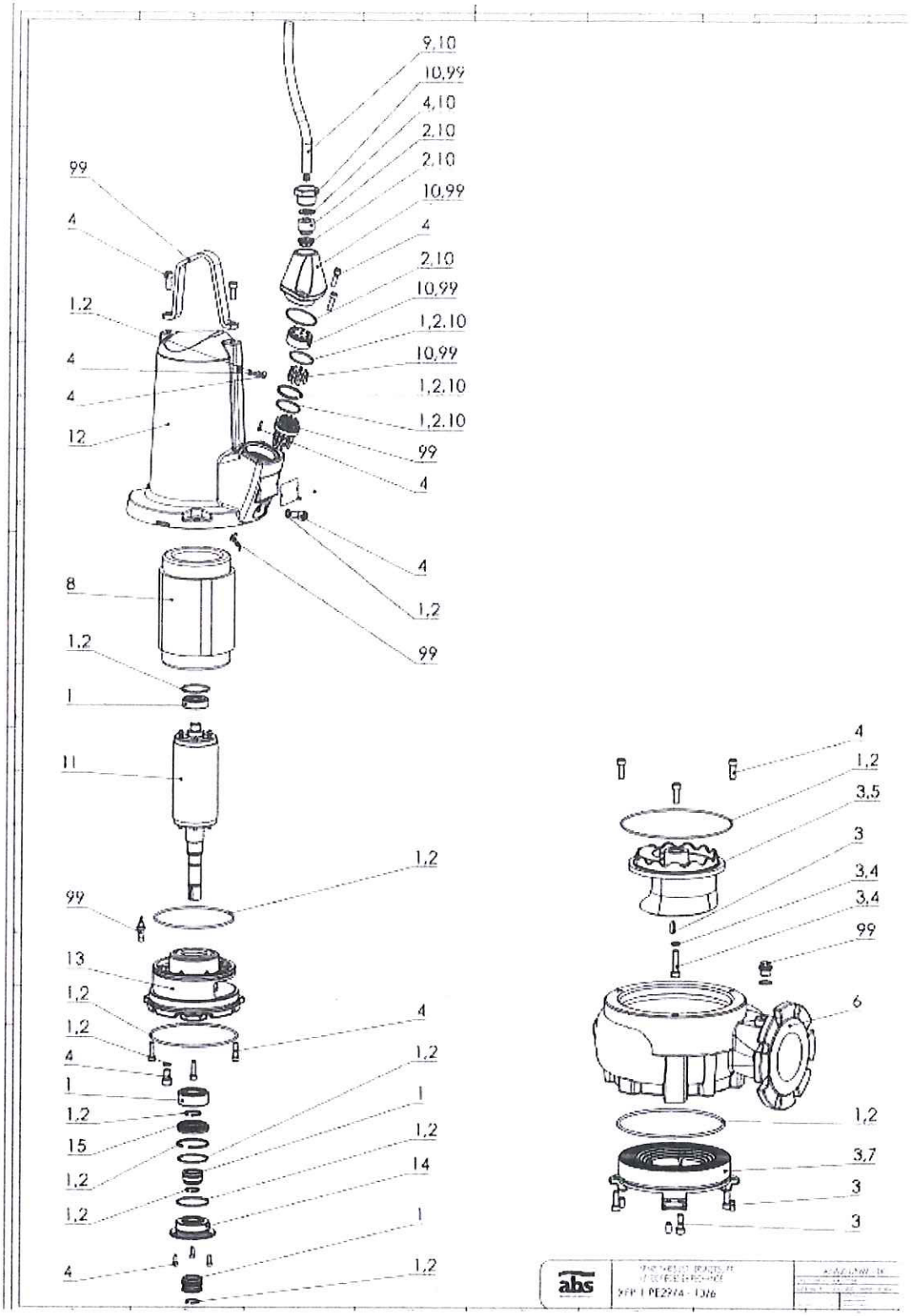

D.O.O. VODOVOD I KANALIZACIJA DANILOVGRAD

STRABAG STRABAG AG

D.O.O. "VODOVOD I KANALIZACIJA" DANILOVGRAD

STRABAG
STRABAG AG

XFP 100G-CB1
PE110/4
XFP100G CB1.5

1.	Repair Kit	61705087	KIT REPAIR XFP PE3 CB DRY (With Cooling System)
	Repair Kit	61705088	KIT REPAIR XFP PE3 CB DRY US (With Cooling System)
	Repair Kit	61705089	KIT REPAIR XFP PE3.5 CB DRY (With Cooling System)
	Repair Kit	61705090	KIT REPAIR XFP PE3.5 CB DRY US (With Cooling Syste
	Repair Kit	61705091	KIT REPAIR XFP PE3 CB WET
	Repair Kit	61705092	KIT REPAIR XFP PE3 CB WET US
	Repair Kit	61705093	KIT REPAIR XFP PE3.5 CB WET
	Repair Kit	61705094	KIT REPAIR XFP PE3.5 CB WET US
2.	Seal Kit	61195134	SEAL KIT XFP PE3 CB DRY (With Cooling System)
	Seal Kit	61195135	SEAL KIT XFP PE3.5 CB DRY (With Cooling System)
	Seal Kit	61195136	SEAL KIT XFP PE3 CB WET
	Seal Kit	61195137	SEAL KIT XFP PE3.5 CB WET
3.	Hydraulic Kit	61705862	KIT HYDS.XFP100G CB1.5 DIN
4.	Screw Kit	62615063	KIT SCREW W/S XFP PE3/PE3.5 CB DRY
	Screw Kit	62615064	KIT SCREW W/S XFP PE3/PE3.5 CB WET
5.	Impeller	35075668	XFP100G CB1.5 GG
6.	Volute	31055134	VOLUTE XFP100G CB1/VX GG
7.	Wear Plate	31065105	WEAR PLATE XFP100G CB1/VX DIN GG
8.	Stator	65004035	PE110/4,PE140/4 400/695/3/50
	Stator	65004064	PE110/4,PE140/4 230/400/3/50
	Stator	65004065	PE110/4,PE140/4 500/866/3/50
9.	Cable	43025545	10G1.5 10.5m TECWATER
	Cable	43025546	10G1.5 20.5m TECWATER
	Cable	43025547	10G1.5 30.5m TECWATER
	Cable	43025548	10G1.5 40.5m TECWATER
	Cable	43025549	10G1.5 50.5m TECWATER
	Cable	43025550	10G2.5 10.5m TECWATER
	Cable	43025551	10G2.5 20.5m TECWATER
	Cable	43025552	10G2.5 30.5m TECWATER
	Cable	43025553	10G2.5 40.5m TECWATER
	Cable	43025554	10G2.5 50.5m TECWATER
10.	CableAssembly	61025021	LID ASY.PE3 10G1.5 10m
	CableAssembly	61025022	LID ASY.PE3 10G1.5 20m
	CableAssembly	61025023	LID ASY.PE3 10G1.5 30m
	CableAssembly	61025024	LID ASY.PE3 10G1.5 40m
	CableAssembly	61025025	LID ASY.PE3 10G1.5 50m
	CableAssembly	61025026	LID ASY.PE3 10G2.5 10m
	CableAssembly	61025027	LID ASY.PE3 10G2.5 20m
	CableAssembly	61025028	LID ASY.PE3 10G2.5 30m
	CableAssembly	61025029	LID ASY.PE3 10G2.5 40m
	CableAssembly	61025030	LID ASY.PE3 10G2.5 50m
11.	Rotor Asssembly	65015329	PE110/4,PE140/4 50Hz PE130/4,PE150/4 60Hz 1.4021

ABS reserves the right to alter specifications due to technical develop

D.O.O. VODOVOD I KANALIZACIJA PAVLOVGRAD VIK

STRABAG STRABAG AG

XFP 100G-CB1
PE110/4
XFP100G CB1.5

12.	MotorHousing	31005084	PE3 WET GG	
	MotorHousing	31005085	PE3 DRY (With Cooling System) GG	
13.	BearingHousing	31155076	BEARING LID PE3 LOWER WET GG	
	BearingHousing	31155077	BEARING LID PE3 UPPER WET GG	
	BearingHousing	31155078	BEARING LID PE3 LOWER DRY (With Cooling System) G	
	BearingHousing	31155083	BEARING LID PE3 UPPER DRY (With Cooling System) G	
14.	SealHoldingPlate	31165028	SEAL HOLD.PLATE PE3 GG	
15.	TransitionPiece	None	None required	
16.	Other Parts	31325016	Cable cap	PE1 + PE2
	Other Parts	31325017	Cable cap	PE2 Large (AWG Cable)
	Other Parts	31325018	Cable cap	PE3 + PE3.5 (D40 ID26)
	Other Parts	31325019	Cable cap	PE3 + PE3.5 (D50 ID34)
	Other Parts	42175000	Clamp strap earth	
	Other Parts	43435000	Connection support	
	Other Parts	12180172	Connectors	
	Other Parts	42015037	Deflector	PE3 + PE3.5
	Other Parts	61035006	DI-probe complete	PE1,PE2
	Other Parts	61035007	DI-probe complete	PE3
	Other Parts	31995021	Earth lead	
	Other Parts	41425106	Lifting hoop	PE1
	Other Parts	41425107	Lifting hoop	PE2
	Other Parts	41425115	Lifting hoop	PE3 + PE3.5
	Other Parts	11560018	Plug screw	Fitting volute
	Other Parts	42965004	Pressure screw	
	Other Parts	12200020	Terminal block	PE3 (6 POLE M6)
	Other Parts	13430268	Terminal block	PE3 (6xPWR-90A+3xCTL)
	Other Parts	61135010	Terminal block	PE1 + PE2 (10 POLE)

ABS reserves the right to alter specifications due to technical develop

D.O.O. VODOVOD I KANALIZACIJA ViK OMIŠ OVGRAD

STRABAG AG

XFP

XFP 100G-CB1

XFP100G CB1.5

PE110/4

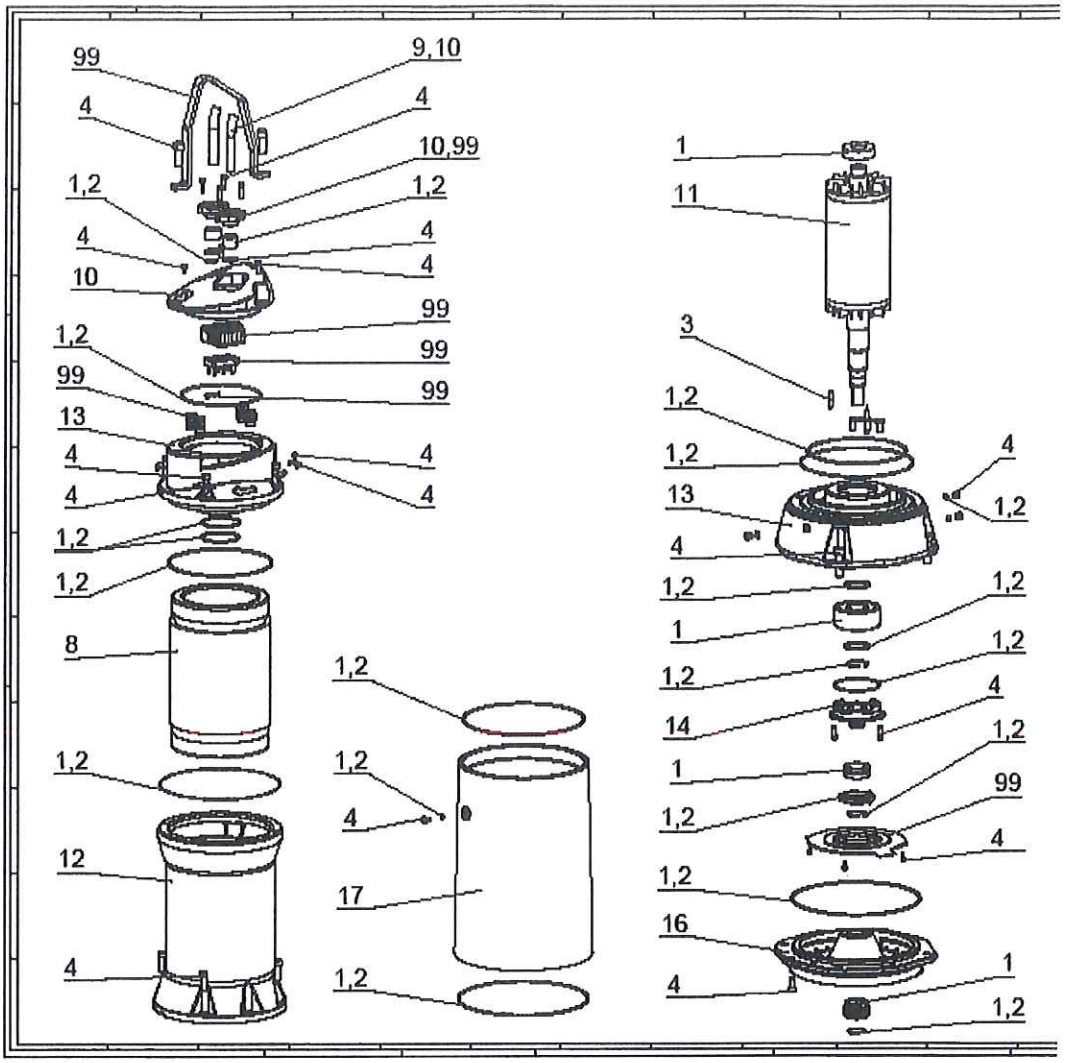

D.O.O. VODOVOD I KANALIZACIJA VIK DANILOVGRAD

STRABAG
STRABAG AG

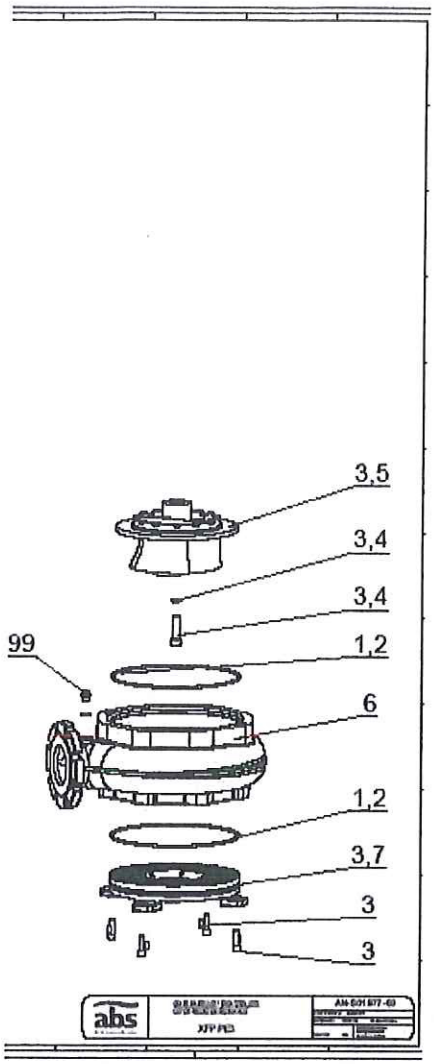
3,5
3,4
3,4
99
1,2
6
1,2
3,7
3
3
abs

XFP 150G-CB1
PE140/4
XFP150G CB1.4

1.	Repair Kit	61705087	KIT REPAIR XFP PE3 CB DRY (With Cooling System)
	Repair Kit	61705088	KIT REPAIR XFP PE3 CB DRY US (With Cooling System)
	Repair Kit	61705089	KIT REPAIR XFP PE3.5 CB DRY (With Cooling System)
	Repair Kit	61705090	KIT REPAIR XFP PE3.5 CB DRY US (With Cooling Syste
	Repair Kit	61705091	KIT REPAIR XFP PE3 CB WET
	Repair Kit	61705092	KIT REPAIR XFP PE3 CB WET US
	Repair Kit	61705093	KIT REPAIR XFP PE3.5 CB WET
	Repair Kit	61705094	KIT REPAIR XFP PE3.5 CB WET US
2.	Seal Kit	61195134	SEAL KIT XFP PE3 CB DRY (With Cooling System)
	Seal Kit	61195135	SEAL KIT XFP PE3.5 CB DRY (With Cooling System)
	Seal Kit	61195136	SEAL KIT XFP PE3 CB WET
	Seal Kit	61195137	SEAL KIT XFP PE3.5 CB WET
3.	Hydraulic Kit	61705876	KIT HYDS.XFP150G CB1.4 DIN
4.	Screw Kit	62615063	KIT SCREW W/S XFP PE3/PE3.5 CB DRY
	Screw Kit	62615064	KIT SCREW W/S XFP PE3/PE3.5 CB WET
5.	Impeller	35075683	XFP150G CB1.4 D265 GG
6.	Volute	31055140	VOLUTE XFP150G CB1/VX GG
7.	Wear Plate	31065108	WEAR PLATE XFP150G CB1/VX DIN GG
8.	Stator	65004035	PE110/4,PE140/4 400/695/3/50
	Stator	65004064	PE110/4,PE140/4 230/400/3/50
	Stator	65004065	PE110/4,PE140/4 500/866/3/50
9.	Cable	43025166	4G4+2x0.75 10m (Cable1)
	Cable	43025167	4G4+2x0.75 20m (Cable1)
	Cable	43025168	4G4+2x0.75 30m (Cable1)
	Cable	43025173	4G4+2x0.75 10m (Cable2)
	Cable	43025174	4G4+2x0.75 20m (Cable2)
	Cable	43025175	4G4+2x0.75 30m (Cable2)
	Cable	43025224	4G4+2x0.75 40.5m(Cable 1)
	Cable	43025225	4G4+2x0.75 40.5m(Cable 2)
	Cable	43025238	4G4+2x0.75 50.5m(Cable 1)
	Cable	43025239	4G4+2x0.75 50.5m(Cable 2)
	Cable	43025545	10G1.5 10.5m TECWATER
	Cable	43025546	10G1.5 20.5m TECWATER
	Cable	43025547	10G1.5 30.5m TECWATER
	Cable	43025548	10G1.5 40.5m TECWATER
	Cable	43025549	10G1.5 50.5m TECWATER
10.	CableAssembly	61025021	LID ASY.PE3 10G1.5 10m
	CableAssembly	61025022	LID ASY.PE3 10G1.5 20m
	CableAssembly	61025023	LID ASY.PE3 10G1.5 30m
	CableAssembly	61025024	LID ASY.PE3 10G1.5 40m
	CableAssembly	61025025	LID ASY.PE3 10G1.5 50m
	CableAssembly	61025031	LID ASY.PE3 4G4x2 10m
	CableAssembly	61025032	LID ASY.PE3 4G4x2 20m

ABS reserves the right to alter specifications due to technical develop
ments

D.O.O. VODOVOD I KANALIZACIJA DANILOVGRAD ViK

STRABAG
STRABAG AG

XFP 150G-CB1
PE140/4
XFP150G CB1.4

	CableAssembly	61025033	LID ASY.PE3 4G4x2 30m	
	CableAssembly	61025034	LID ASY.PE3 4G4x2 40m	
	CableAssembly	61025035	LID ASY.PE3 4G4x2 50m	
11.	Rotor Asssembly	65015329	PE110/4,PE140/4 50Hz PE130/4,PE150/4 60Hz 1.4021	
12.	MotorHousing	31005084	PE3 WET GG	
	MotorHousing	31005085	PE3 DRY (With Cooling System) GG	
13.	BearingHousing	31155076	BEARING LID PE3 LOWER WET GG	
	BearingHousing	31155077	BEARING LID PE3 UPPER WET GG	
	BearingHousing	31155078	BEARING LID PE3 LOWER DRY (With Cooling System) G	
	BearingHousing	31155083	BEARING LID PE3 UPPER DRY (With Cooling System) G	
14.	SealHoldingPlate	31165028	SEAL HOLD.PLATE PE3 GG	
15.	TransitionPiece	None	None required	
16.	Other Parts	31325016	Cable cap	PE1 + PE2
	Other Parts	31325017	Cable cap	PE2 Large (AWG Cable)
	Other Parts	31325018	Cable cap	PE3 + PE3.5 (D40 ID26)
	Other Parts	31325019	Cable cap	PE3 + PE3.5 (D50 ID34)
	Other Parts	42175000	Clamp strap earth	
	Other Parts	43435000	Connection support	
	Other Parts	12180172	Connectors	
	Other Parts	42015037	Deflector	PE3 + PE3.5
	Other Parts	61035006	DI-probe complete	PE1,PE2
	Other Parts	61035007	DI-probe complete	PE3
	Other Parts	31995021	Earth lead	
	Other Parts	41425106	Lifting hoop	PE1
	Other Parts	41425107	Lifting hoop	PE2
	Other Parts	41425115	Lifting hoop	PE3 + PE3.5
	Other Parts	11560018	Plug screw	Fitting volute
	Other Parts	42965004	Pressure screw	
	Other Parts	12200020	Terminal block	PE3 (6 POLE M6)
	Other Parts	13430268	Terminal block	PE3 (6xPWR-90A+3xCTL)
	Other Parts	61135010	Terminal block	PE1 + PE2 (10 POLE)

ABS reserves the right to alter specifications due to technical develop

VODOVOD I KANALIZACIJA VIK DANILOVGRAD

STRABAG
STRABAG AG

XFP

XFP 150G-CB1

XFP150G CB1.4

PE140/4

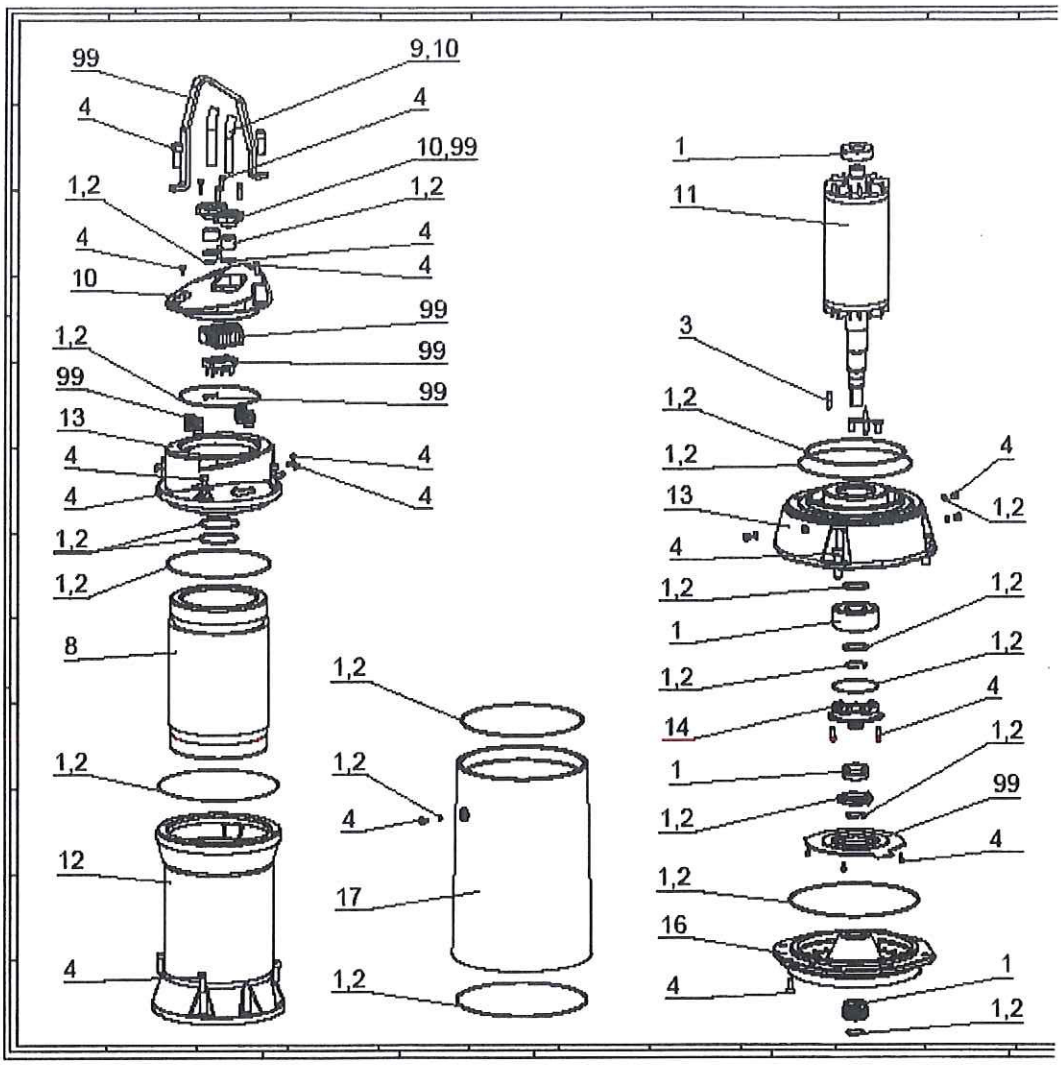

D.O.O. VODOVOD I KANALIZACIJA ViK PANILOVGRAD

STRABAG
STRABAG AG

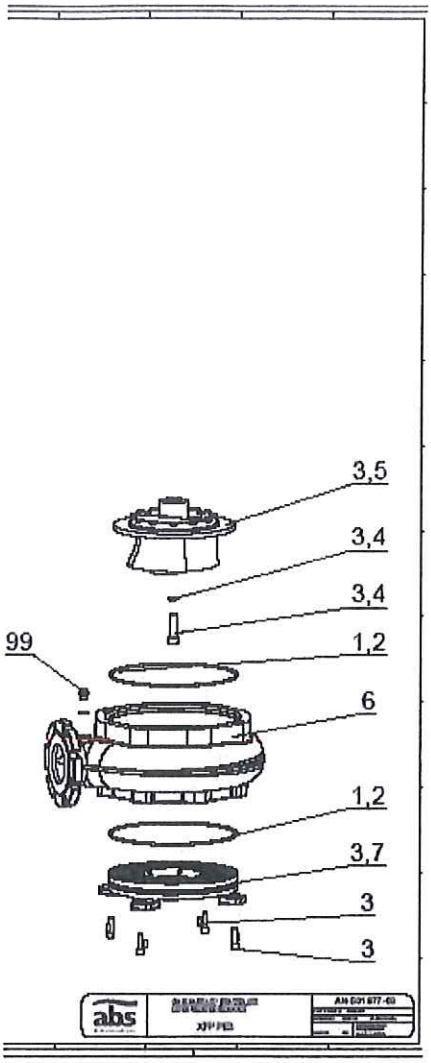

D.O.O. VODOVOD I KANALIZACIJA VIK DANILOVGRAD

STRABAG
STRABAG AG

VOLUME I.iv

TENDER FORM - TWO STAGE TENDER - SECOND STAGE TENDER

Date: 14/05/2018

STRABAG AG
Ortenburgerstrasse 27, A-9800 Spittal/Drau, Austria

Name of Contract: Danilovgrad Municipal Infrastructure - Rehabilitation of existing and construction of new sewers
To: D.O.O. "Vodovod i kanalizacija" Danilovgrad , Caja Scepanovica bb, 81410 Danilovgrad, State of Montenegro

Having examined the tender documents, including Addenda Nos. **1, 2 & 3**, and your requirements incorporated in the Memorandum of the clarification meeting held between us on **28/11/2017**, we, the undersigned, offer to design, manufacture, test, deliver, install, precommission and commission the Facilities under the above-named Contract in full conformity with the said tender documents and the said Memorandum for the sum of:

.....
(amount of foreign currency in words)

.....
(amount in figures)

and

two million and seven hundred forty-nine thousand and four hundred and seventeen euros and twenty-eight cents without VAT
(amount of local currency in words)

(2.749.417,28 €)
(amount in figures)

three million and three hundred twenty-six thousand and seven hundred and ninety-four euros and ninety-one cent with VAT
(amount of local currency in words)

(3.326.794,91 €)
(amount in figures)

or such other sums as may be determined in accordance with the terms and conditions of the Contract. The above amounts are in accordance with the price schedules attached herewith and are made part of this tender.

We undertake, if our tender is accepted, to commence the Facilities, and to achieve Completion within the times stated in the tender documents.

If our tender is accepted, we undertake to provide an advance payment security and a Performance Security in the form and amounts, and within the times specified in the tender documents.

D.O.O. VODOVOD I KANALIZACIJA VIK DANILOVGRAD

001

STRABAG
STRABAG AG

We agree to abide by this tender for a period of ***120*** **days** from the date set for submission of the Second Stage Tenders as stipulated in the letter of invitation to submit a Second Stage Tender, and it shall remain binding upon us and may be accepted by you at any time prior to the expiration of that period.

Until a formal Contract Agreement is prepared and executed between us, this tender, together with your written acceptance thereof and your notification of award, shall constitute a binding contract between us.

We understand that you are not bound to accept the lowest or any tender you may receive.

Dated this 14 day of May year 2018

.....
(signature)

In the capacity of

Authorised Representative
(position)

Duly authorised to sign this tender for and on behalf of

STRABAG AG
Ortenburgerstrasse 27, A-9800 Spittal/Drau, Austria
(name of tenderer)

D.O.O. VODOVOD I KANALIZACIJA VIK DANILOVGRAD

002

STRABAG
STRABAG AG

KNJIGA I.iv
TENDERSKI FORMULAR-DVOFAZNI TENDER-DRUGA FAZE TENDERA

Datum: 14.05.2018.

STRABAG AG
Ortenburgerstrasse 27, A-9800 Spittal/Drau, Austrija

Naziv ugovora: Danilovgrad Komunalna infrastruktura- Sanacija postojeće i izgradnja nove kanalizacije
Za: DOO Vodovod i kanalizacija Danilovgrad, Caja Scepanovica bb, 81410 Danilovgrad, Crna Gora

Nakon pregleda tenderske dokumentacija, uključujući Dodatak br **1, 2 &3** i Vaš zahtjev uključen u Zapisnik o pojašnjenju sa sastanka održanog među nama **28/11/2017** mi dolje potpisani nudimo da dizajniramo, proizvodimo, ispitujemo, isporučujemo, instaliramo, izvršimo završne radnje i puštimo u rad Objekte shodno gore navedenom Ugovoru u potpunoj usklađenosti sa pomenutom tenderskom dokumentacijom

…….
(iznos u stranoj valuti slovima)

…… (……..)
(iznos brojevima)

i

dva miliona sedam stotina četrdeset devet hiljada četiri stotine sedamnaest eura i dvadeset osam centi bez PDV-a
(iznos u domaćoj valuti slovima)

…… (2.749.417,28)
(iznos brojevima)

tri miliona trista dvadeset šest hiljada sedam stotina devedeset četiri eura i devedeset jedan cent …….. sa PDV-om
(iznos u domaćoj valuti slovima)

…… (3.326.794,91)
(iznos brojevima)

ili neke druge sume kako može biti utvrđeno u skladu sa uslovima Ugovora. Gore navedeni iznosi su u skladu sa ovdje priloženom specifikacijom cijena i koja čini dio ovog tendera.
Obavezujemo se, ukoliko naš tender bude prihvaćen, da započnemo Objekte i da postignemo Završetak u vremenskom roku navedenom u tenderskoj dokumentaciji.
Ukoliko je naš tender prihvaćen, obavezujemo se da obezbijedimo garanciju za avansno plaćanje i garanciju za dobro izvršenje posla u obliku i iznosu I u vremenskom roku navedenom u tenderskoj dokumentaciji.

STRABAG
STRABAG AG

003

D.O.O. "VODOVOD I KANALIZACIJA" VIK DANILOVGRAD

Saglasni smo da se pridržavamo ovog tendera za period od **120 dana** od datuma navedenog za dostavljanje Druge faze tendera kako je predviđeno u pozivnici za dostavljenje druge faze tendera i on ostaje obavezujući za nas i možete ga prihvatiti bilo kada prije isteka tog perioda.

Dok se ne pripremi i dok ga potpišemo zvanični Ugovor ovaj tender zajedno sa Vašim pisanim prihvatanjem i Vašim obavještenjem o dodjeli čini obavezujući ugovor među nama.

Razumijemo da niste obavezani da prihvatite najniži niti bilo koji frugi tender.

Datum: 14. maj 2018.

.....
(potpis)

U svojstvu
Ovlašćenog zastupnika
(funkcija)

Uredno ovlašćen da potpiše ovaj tender za i u ime
STRABAG AG
Ortenburgerstrasse 27, A-9800 Spittal/Srau Austrija
(naziv ponuđača)

STRABAG
STRABAG AG

D.O.O. VODOVOD I KANALIZACIJA VIK DANILOVGRAD

004

8733-IFT-41252
IFT Number .....
1

Schedule No.

SCHEDULE OF RATES AND PRICES

SCHEDULE NO.1 - PLANT AND EQUIPMENT, INCLUDING MANDATORY SPARE PARTS SUPPLIED FROM ABROAD

Name of tenderer STRABAG AG Ortenburgerstrasse 27, A-9800 Spittal/Drau, Austria

Tender identification no. EBRD ME DAN 9000

Important note: Items detail specifications and description refer to Volume III - The Requirements, document III.i Technical Specifications.

Item	Description	Quantity	Unit price CIP (border)	Unit price (other INCOTERMS)	Total price per item (1x2) or (1x3)
		1	2	3	4
1	**Sewerage system - Zone 1**	**1.0 set**	44614,97	X	44614,97
2	**Sewerage system - Zone 2**	**1.0 set**	66789,67	X	66789,67
3	**Sewerage system - Zone 3**	**1.0 set**	/	X	/
4	**Sewerage Dispatching**	**1.0 set**	126863,69	X	126863,69
				X	
				Total amount	238268,34

Signature of tenderer

Note:

1. In case of discrepancy between unit price and total, prices will be adjusted in accordance with Paragraph 33.3 of the Instructions to Tenderers.
2. Prices and currencies to be in accordance with Paragraphs 23 and 24 respectively of the Instructions to Tenderers.
3. Currencies are to be clearly specified in accordance with the Instructions to Tenderers.

STRABAG
STRABAG AG

D.O.O. VODOVOD I KANALIZACIJA ViK ORAHOVAC

SPECIFIKACIJA KURSA I CIJENA

BROJ SPECIFIKACIJE 1- POSTROJENJA I OPREMA, UKLJUČUJUĆI OBAVEZNE REZERVNE DJELOVE NABAVLJENE IZ UVOZA

Naziv ponuđača STRABAG AG Ortenburgerstrasse 27, A-9800 Spittal/Drau, Austria

Strana 1 od 1

Identifikacioni broj tendera EBRD ME DAN 9000

Važna napomena: Stavke, detalji specifikacije i opis se odnosi na Knjigu III- Zahtjevi, dokument III.i Tehničke specifikacije

Stavka	Opis	Količina	Jedinična cijena CIP (granica)	Jedinična cijena (ostalo INCOTERMS)	Ukupna cijena po stavci (1x2) ili (1x3)
		1	2	3	4
1	**Kanalizacioni sistem-Zona 1**	**1.0 komplet**	44614,97		44614,97
2	**Kanalizacioni sistem-Zona 2**	**1.0 komplet**	66789,67		66789,67
3	**Kanalizacioni sistem-Zona 3**	**1.0 komplet**	/		/
4	**Kanalizacija-otpremanje**	**1.0 komplet**	126863,69		126863,69
				UKUPAN IZNOS	238268,34

Potpis ponuđača

Napomena:

1. U slučaju protivrječnosti između jedinične cijene i ukupnog iznosa, cijene će biti usklađene sa stavom 33.3 Uputstava ponuđačima.
2. Cijene i valute biće u skladu sa st. 23 i 24 Uputstava ponuđačima.
3. Valute će jasno biti naznačene u skladu sa Uputstvima ponuđačima.

D.O.O. "VODOVOD I KANALIZACIJA" VjK NIKŠIĆ

STRABAG
STRABAG AG

006

IFT Number 8733-IFT-41252 .....:

Schedule No. 2

SCHEDULE OF RATES AND PRICES

SCHEDULE No.2 - PLANT AND EQUIPMENT SUPPLIED FROM WITHIN THE EMPLOYER'S COUNTRY

Name of tenderer STRABAG AG Ortenburgerstrasse 27, A-9800 Spittal/Drau, Austria

Tender identification no. EBRD ME DAN 9000

Important note: Items detail specifications and description refer to Volume III - The Requirements, document III.i Technical Specifications.

Item	Description	Quantity	Unit price EXW		Import duties and taxes on directly imported components	Total price per item (1x2)	
			Foreign *	Local *		Foreign * 1x2+4	Local * 1x3+4
		1	2	3	4	5	6
1	Sewerage system - Zone 1	1.0 set	/	X	X	/	X
2	Sewerage system - Zone 2	1.0 set	/	X	X	/	X
3	Sewerage system - Zone 3	1.0 set	/	X	X	/	X
4	Sewerage Dispatching	1.0 set	/	X	X	/	X
				X	X		X
					Total amount	0,00	X

Signature of tenderer

Note:

1. In case of discrepancy between unit price and total, prices will be adjusted in accordance with Paragraph 33.3 of the Instructions to Tenderers.
2. Prices and currencies to be in accordance with Paragraphs 23 and 24 respectively of the Instructions to Tenderers.
3. Currencies are to be clearly specified in accordance with the Instructions to Tenderers.

P.O. VODOVOD I KANALIZACIJA DANILOVGRAD ViK

STRABAG STRABAG AG

007

SPECIFIKACIJA KURSA I CIJENA

BROJ SPECIFIKACIJE 2- POSTOJENJA I OPREMA NABAVLJENA UNUTAR ZEMLJE NARUČIOCA

Naziv ponuđača STRABAG AG Ortenburgerstrasse 27, A-9800 Spittal/Drau, Austria

Strana 1 od 1

Identifikacioni broj tendera EBRD ME DAN 9000

Važna napomena: Stavke, detalji specifikacije i opis se odnosi na Knjigu III- Zahtjevi, dokument III.i Tehničke specifikacije

Stavka	Opis	Količina	Jedinična cijena EXW Strana *	Domaća *	Uvozne dažbine i porezi na direktno uvezene komponente	Ukupna cijena po stavci (1x2) Strana * 1x2+4	Domaća * 1x3+4
		1	2	3	4	5	6
1	**Kanalizacioni sistem-Zona 1**	**1.0 komplet**	/			/	
2	**Kanalizacioni sistem-Zona 2**	**1.0 komplet**	/			/	
3	**Kanalizacioni sistem-Zona 3**	**1.0 komplet**	/			/	
4	**Kanalizacija-otpremanje**	**1.0 komplet**	/			/	
					UKUPAN IZNOS	0,00	

Potpis ponuđača

Napomena:

1. U slučaju protivrječnosti između jedinične cijene i ukupnog iznosa, cijene će biti usklađene sa stavom 33.3 Uputstava ponuđačima.
2. Cijene i valute biće u skladu sa st. 23 i 24 Uputstava ponuđačima.
3. Valute će jasno biti naznačene u skladu sa Uputstvima ponuđačima.

DOO "VODOVOD I KANALIZACIJA" VIK DANILOVGRAD

008 STRABAG STRABAG AG

SCHEDULE OF RATES AND PRICES

SCHEDULE No.3 - LOCAL TRANSPORTATION

Name of tenderer STRABAG AG
Ortenburgerstrasse 27, A-9800 Spittal/Drau, Austria

Page 1 of 1

Tender identification no. EBRD ME DAN 9000

Important note: Items detail specifications and description refer to Volume III - The Requirements, document III.i Technical Specifications.

Item	Description	Quantity	Unit price*	Total price (1x2)
		1	2	3
1	**Sewerage system - Zone 1**	**1.0 set**	2348,16	2348,16
2	**Sewerage system - Zone 2**	**1.0 set**	3515,25	3515,25
3	**Sewerage system - Zone 3**	**1.0 set**		
4	**Sewerage Dispatching**	**1.0 set**	9548,88	9548,88
	TOTAL (TO GRAND SUMMARY)			15412,28

Signature of tenderer

*Specify currencies in accordance with the Instructions to Tenderers.

D.O.O. "VODOVOD I KANALIZACIJA" ViK NIKŠIĆ

STRABAG AG

SPECIFIKACIJA KURSA I CIJENA

BROJ SPECIFIKACIJE 3- LOKALNI PREVOZ

Naziv ponuđača STRABAG AG Ortenburgerstrasse 27, A-9800 Spittal/Drau, Austria

Strana 1 od 1

Identifikacioni broj tendera EBRD ME DAN 9000

Važna napomena: Stavke, detalji specifikacije i opis se odnosi na Knjigu III- Zahtjevi, dokument III.i Tehničke specifikacije

Stavka	Opis	Količina	Jedinična cijena*	Ukupna cijena (1x2)
		1	2	3
1	**Kanalizacioni sistem-Zona 1**	**1.0 komplet**	2348,15	2348,15
2	**Kanalizacioni sistem-Zona 2**	**1.0 komplet**	3515,25	3515,25
3	**Kanalizacioni sistem-Zona 3**	**1.0 komplet**	/	/
4	**Kanalizacija-otpremanje**	**1.0 komplet**	9548,88	9548,88
UKUPNO (UZ SVEUKUPNI ZBIR)				**15412,28**

Potpis ponuđača

*Navedite cijene u skladu sa Uputstvima ponuđačima.

D.O.O. VODOVOD I KANALIZACIJA DANILOVGRAD VIK

010 STRABAG STRABAG AG

IFT Number 8733-IFT-41252 .....

SCHEDULE OF RATES AND PRICES

SCHEDULE No.4 - INSTALLATION AND OTHER SERVICES

Name of tenderer STRABAG AG Ortenburgerstrasse 27, A-9800 Spittal/Drau, Austria

Tender identification no. EBRD ME DAN 9000

Important note: Items detail specifications and description refer to Volume III - The Requirements, document III.i Technical Specifications.

			Unit price		Total price	Total price
Item	**Description**	**Quantity**	**Foreign Currency Portion ***	**Local Currency Portion***	**Foreign * 1x2**	**Local* 1x3**
		1	**2**	**3**	**4**	**5**
1	**Sewerage system - Zone 1**	**1.0 set**	379837,92		379837,92	
2	**Sewerage system - Zone 2**	**1.0 set**	687561,20		687561,20	
3	**Sewerage system - Zone 3**	**1.0 set**	542249,11		542249,11	
4	**Sewerage Dispatching**	**1.0 set**	/		/	
5	**Reconstruction of existing sewerage – section "Landža"**	**1.0 set**	441129,03		441129,03	
6	**Reconstruction of existing sewerage – section "Pažići"**	**1.0 set**	158392,83		158392,83	
7	**Reconstruction of existing sewerage – section "Stadion"**	**1.0 set**	146059,22		146059,22	
8	**Design of main project including 7 zones, reconstruction of existing sewerage network and dispatching**	**1.0 set**	140507,35		140507,35	
	TOTAL (TO GRAND SUMMARY)				2495736,66	

Signature of tenderer

*Specify currencies in accordance with the Instructions to Tenderers.

D.O.O. "VODOVOD I KANALIZACIJA" VIK DANILOVGRAD

STRABAG STRABAG AG

011

SPECIFIKACIJA KURSA I CIJENA

BROJ SPECIFIKACIJE 4- INSTALACIJA I OSTALE USLUGE

Naziv ponuđača STRABAG AG Ortenburgerstrasse 27, A-9800 Spittal/Drau, Austria

Strana 1 od 1

Identifikacioni broj tendera EBRD ME DAN 9000

Važna napomena: Stavke, detalje specifikacije i opis se odnosi na Knjigu III- Zahtjevi, dokument III.i Tehničke specifikacije

			Jedinična cijena		Ukupna cijena	Ukupna cijena
Stavka	**Opis**	**Količina**	**Dio u stranoj valuti** *	**Dio u domaćoj valuti** *	**Strana** * 1x2	**Domaća** * 1x3
		1	2	3	4	5
1	**Kanalizacioni sistem- Zona 1**	**1.0 komplet**	379837,92		379837,92	
2	**Kanalizacioni sistem- Zona 2**	**1.0 komplet**	687561,20		687561,20	
3	**Kanalizacioni sistem- Zona 3**	**1.0 komplet**	542249,11		542249,11	
4	**Kanalizacija- otpremanje**	**1.0 komplet**	/		/	
5	**Rekonstrukcija postojeće kanalizacije- dionica Landža**	**1.0 komplet**	441129,03		441129,03	
6	**Rekonstrukcija postojeće kanalizacije- dionica Pažići**	**1.0 komplet**	158392,83		158392,83	
7	**Rekonstrukcija postojeće kanalizacije- dionica Stadion**	**1.0 komplet**	146059,22		146059,22	
8	**Dizajn glavnog projekta uključujući 7**	**1.0 komplet**	140507,35		140507,35	

012

STRABAG
STRABAG AG

	zona, rekonstrukcija postojeće kanalizacione mreže i otpremanje					
UKUPNO (UZ SVEUKUPNI ZBIR)					2495736,66	

Potpis ponuđača

*Navedite cijene u skladu sa Uputstvima ponuđačima.

D.O.O. VODOVOD I KANALIZACIJA ViK PLJEVLJA

013

STRABAG
STRABAG AG

IFT Number 8733-IFT-41252 .....

SCHEDULE OF RATES AND PRICES

SCHEDULE No. 5 - GRAND SUMMARY

Name of tenderer STRABAG AG
Ortenburgerstrasse 27, A-9800 Spittal/Drau, Austria

Page ___ of ___

Tender identification no. EBRD ME DAN 9000

Item	Description	Total price Foreign Currency Portion*	Total price Local Currency Portion*
1	**TOTAL SCHEDULE No. 1** **Plant and Equipment, including mandatory spare parts, supplied from abroad**	238268,34	
2	**TOTAL SCHEDULE No. 2** **Plant and Equipment, including mandatory spare parts, supplied from within the Employer's country**	/	
3	**TOTAL SCHEDULE No. 3** **Local Transportation**	15412,28	
4	**TOTAL SCHEDULE No. 4** **Installation and other Services**	2495736,66	
	GRAND TOTAL (TO TENDER FORM)	2749417,28	

Signature of tenderer

*Specify currencies in accordance with the Instructions to Tenderers.

D.O.O. VODOVOD I KANALIZACIJA VIK TREBINJE

014

STRABAG
STRABAG AG

IFT Broj **8733-IFT-41252**

Broj specifikacije 5

SPECIFIKACIJA KURSA I CIJENA

BROJ SPECIFIKACIJE 5- SVEUKUPNI ZBIR

Naziv ponuđača STRABAG AG Ortenburgerstrasse 27, A-9800 Spittal/Drau, Austria

Identifikacioni broj tendera EBRD ME DAN 9000

Stavka	Opis	Ukupna cijena Dio u stranoj valuti*	Ukupna cijena Dio u domaćoj valuti*
1	**UKUPNO SPECIFIKACIJA br. 1 Postrojenje i oprema, uključujući obavezne rezervne djelove, nabavljene iz uvoza**	238268,34	
2	**UKUPNO SPECIFIKACIJA br. 2 Postrojenje i oprema, uključujući obavezne rezervne djelove, nabavljene unutar zemlje naručioca**	/	
3	**UKUPNO SPECIFIKACIJA br. 3 Lokalni prevoz**	15412,28	
4	**UKUPNO SPECIFIKACIJA br. 4 Instalacija i ostale usluge**	2495736,66	
SVEUKUPNO (UZ TENDERSKI FORMULAR)		2749417,28	

Potpis ponuđača

STRABAG
STRABAG AG

015

VODOVOD I KANALIZACIJA D.O.O. VIK DANILOVGRAD

IFT Broj **8733-IFT-41252**

Broj specifikacije 6

SPECIFIKACIJA KURSA I CIJENA

BROJ SPECIFIKACIJE 6- PREPORUČENI REZERVNI DJELOVI

Naziv ponuđača STRABAG AG Ortenburgerstrasse 27, A-9800 Spittal/Drau, Austria

Identifikacioni broj tendera EBRD ME DAN 9000

Stavka	Opis	Količina	Jedinična cijena*		Ukupno
			Iz uvoza (CIP)	Iz zemlje naručioca (EXW)	Cijena (1x2x3)
		1	2	3	4
1.	OSLONAC	4	250,00		1000,00
2.	UMETNI POKLOPAC 80x80	4	180,00		720,00
				Ukupan iznos	1720,00

Potpis ponuđača

*Navedite cijene u skladu sa Uputstvima ponuđačima.

STRABAG
STRABAG AG

0016

D.O.O. VODOVOD I KANALIZACIJA ViK PLJEVLJA

IFT Number 8733-IFT-41252 .....

SCHEDULE OF RATES AND PRICES

SCHEDULE No.6 - RECOMMENDED SPARE PARTS

Name of tenderer STRABAG AG Ortenburgerstrasse 27, A-9800 Spittal/Drau, Austria

Tender identification no. EBRD ME DAN 9000

			UNIT PRICE*		TOTAL
Item	Description	Qty.	From abroad (CIP)	From within Employer's country (EXW)	PRICE (1 x 2 x 3)
		1	2	3	4
1	SUPPORTS, ALL supports should be made of stainless steel (ANSI 304)	4	250,00	/	1000,00
2	METAL SHEET COVER 80 x 80 cm	4	180,00	/	720,00
				Total amount	1720,00

Signature of tenderer

* Specify currencies in accordance with the Instructions to Tenderers.

STRABAG
STRABAG AG

017

V.I.K. d.o.o. VODOVOD I KANALIZACIJA DANILOVGRAD

Bank Austria
UniCredit Group

Member of UniCredit Group

From: Postfach 35000, A-1011 Vienna

D.O.O. "Vodovod i kanalizacija"
Danilovgrad
Caja Scepanovica bb
81410 Danilovgrad
State of Montenegro

Trade Finance Sales Austria
Rothschildplatz 1
A-1020 Vienna
Patricia Hackauf
Phone: +43(0)50505/50835
Fax: +43(0)50505/51028
eMail: dok@unicreditgroup.at

Our Reference
8813G1805080
Your Reference
-

Date
09.05.2018

TENDER SECURITY NO. 8813G1805080

Date: May 09, 2018

Name of Contract: Danilovgrad Municipal Infrastructure - Rehabilitation of existing and construction of new sewers

To: D.O.O. "Vodovod i kanalizacija" Danilovgrad, Caja Scepanovica bb, 81410 Danilovgrad, State of Montenegro

WHEREAS STRABAG AG (hereinafter called "the tenderer") has submitted its Tender dated 15.05.2018 for the performance of the above named Contract (hereinafter called "the Tender")

KNOW ALL PERSONS by these present that WE, UniCredit Bank Austria AG of Rothschildplatz 1, 1020 Vienna, Austria (hereinafter called "the Bank"), are bound unto D.O.O. "Vodovod i kanalizacija" Danilovgrad, Caja Scepanovica bb, 81410 Danilovgrad, State of Montenegro (hereinafter called "the Employer") in the sum of:

50,000.00 EURO (in words fifty thousand EURO)

for which payment, well and truly to be made to the said Employer, the Bank binds itself, its successors and assigns by these present.

Signed on behalf of the said Bank this 9th day of May 2018.

THE CONDITIONS of this obligation are:

1. If the tenderer withdraws its Tender during the period of tender validity specified by the tenderer in the Tender Form, or

2. If the tenderer, having been notified of the acceptance of its Tender by the Employer during the period of tender validity:

   (a) fails or refuses to sign the Form of Contract Agreement when required, or

   (b) fails or refuses to issue the Performance Security in accordance with the tender documents,

UniCredit Bank Austria AG

018

STRABAG
STRABAG AG

WE undertake to pay to the Employer up to the above amount upon receipt of its first written demand, without the Employer having to substantiate its demand, provided that in its demand the Employer will note that the amount claimed by it is due to it, owing to the occurrence of one or more of the above named CONDITIONS, and specifying the occurred condition or conditions.

This guarantee will remain in full force up to and including October 12, 2018, and any demand in respect thereof must reach the Bank not later than the above date.

This guarantee is subject to the Uniform Rules for Demand Guarantees, ICC Publication No. 758.

For and on behalf of the Bank

Patricia Hackauf
Assistant Manager

Elisabeth Pachert
Assistant Manager

Kind regards

UniCredit Bank Austria AG

Hackauf

Pachert

019

STRABAG

Bank Austria
UniCredit Group
Od: Poštanski fah 35000, A-1011 Beč

Član UniCredit Group

Trgovina, finansije, prodaja Austrija
Rothschildplatz 1
A-1020 Beč
Patricia Hackauf
Tel: +43 (0)50505/50835
Faks: +43 (0) 50505/51028
Email: dok@unicreditgroup.at

D.O.O. „Vodovod i kanalizacija"
Danilovgrad
Čaja Šćepanovića
81410 Danilovgrad
Crna Gora

Naš broj: 8813G1805080
Datum: 09.05.2018.
Vaš broj:

QR oznaka

TENDERSKA GARANCIJA BR. 8813G1805080

Datum: 9. maj 2018. godine

Naziv ugovora: Komunalna infrastruktura Danilovgrada – Rehabilitacija postojećih i izgradnja noviH odvodnih kanala

Za: D.O.O. „Vodovod i kanalizacija" Danilovgrad, Čaja Šćepanovića bb, 81410 Danilovgrad, Crna Gora

S OBZIROM NA TO DA STRABAG AG (u daljem tekstu: Ponuđač) je dostavio svoju Ponudu dana 15.05.2018. godine za izvršenje gore navedenog Ugovora (u daljem tekstu: Ponuda)

OVIM DOKUMENTOM SE SVIMA STAVLJA NA ZNANJE da MI, UniCredit Bank Austria AG, sa adresom Rothschildplatz 1, 1020 Beč, Austrija (u daljem tekstu: Banka) imamo obavezu prema D.O.O. „Vodovod i kanalizacija" Danilovgrad, Čaja Šćepanovića bb, 81410 Danilovgrad, Crna Gora (u daljem tekstu: Naručilac) u iznosu od:

50.000,00 eura (slovima: pedeset hiljada eura)

Za čije plaćanje, koje stvarno i sigurno će da se isplati pomenutom Naručiocu, Banka obavezuje sebe, obavezuje svoje pravne sljedbenike i cesionare ovim dokumentom.

Potpisanim u ime pomenute Banke dana 9. maja 2018. godine.

USLOVI ove obaveze su:

1. Ako ponuđač povuče svoju Ponudu tokom perioda važenja ponude koji je naveo ponuđač u Obrascu ponude, ili

D.O.O. VODOVOD I KANALIZACIJA ViK DANILOVGRAD

020

STRABAG
STRABAG AG

2. Ako ponuđač, pošto je obavješten da je Naručilac prihvatio njegovu Ponudu u toku perioda važenja ponude:

(a) ne potpiše ili odbije da potpiše Obrazac sporazumnog ugovora kada je to potrebno, ili

(b) ne izda ili odbije da izda Garanciju za dobro izvršenje posla u skladu sa tenderskom dokumentacijom,

Obavezujemo se da isplatimo Naručiocu sumu do gore navedenog iznosa po prijemu njegovog prvog pismenog poziva, pri čemu Naručilac ne mora da obrazloži svoj poziv, pod uslovom da će u svom pozivu Naručilac napomenuti da iznos koji potražuje mu i sljeduje, zbog nastanka jednog ili više gore navedenih USLOVA, i naznačiti koji je to uslov ili uslovi.

Ova garancija će ostati na punoj snazi do i uključujući 12. oktobar 2018. godine i svaki poziv u vezi sa njom mora biti dostavljen Banci najkasnije do gore navedenog datuma.

Ova garancija podliježe Ujednačenim pravila za garancije na poziv, Publikacija Međunarodne trgovinske komore br. 758.

U ime i za račun Banke

Patricia Hackauf
Pomoćnik direktora

Elisabeth Pachert
Pomoćnik direktora

S poštovanjem,

UniCredit Bank Austria AG
(data dva potpisa)

D.O.O. "VODOVOD I KANALIZACIJA" VIK NIKŠIĆ

021

STRABAG
STRABAG AG

MEMORANDUM OF CLARIFICATION MEETING
CHANGES REQUIRED PURSUANT TO FIRST STAGE PROPOSAL EVALUATION

STRABAG AG AUSTRIA
Ortenburgerstrasse 27, 9800 Spittal an der Drau, Austria or Zetskih vladara No 5, 81000 Podgorica, Montenegro

Reconstruction of existing and construction of new sewers for D.O.O. "Vodovod i kanalizacija" Danilovgrad, State of Montenegro, 8733-IFT-41252

These Changes Required Pursuant to First Stage Proposal Evaluation are issued in accordance with Para 20.1 of the Instruction to Tenderers of the Tender Documents for the above Contract.

The tenderer is expected to carefully examine the "Changes Required Pursuant to First Stage Proposal Evaluation".

Failure to furnish all information, change, correct or withdraw all the non-conformities identified by the Employer in the First Stage Proposal and listed in these "Changes Required Pursuant to First Stage Proposal Evaluation" will be at the tenderer's risk and will result in the rejection of its tender.

Ref. in First Stage Proposal	Description of Deviation	Ref. in Tender Documents	Changes Required Pursuant to First Stage Proposal Evaluation
			none

28.11.2017, In Danilovgrad

Authorised Signature:
D Kalezic

Name and Title of Signatory:

Dražen Kalezić,
President of Evaluation Committee

Name of Employer:
DOO Vodovod i kanalizacija Danilovgrad

Authorised Signature:

Name and Title of Signatory:
ŽELJKO LEKOVIĆ
AUTHORISED REPRESENTATIVE

Name of Tenderer:
STRABAG AG AUSTRIA

D.O.O. VODOVOD I KANALIZACIJA VIK DANILOVGRAD

022 STRABAG STRABAG AG

MEMORANDUM SA INFORMATIVNOG SASTANKA
PROMJENE POTREBNE SHODNO OCJENI PREDLOGA U PRVOM STEPENU

STRABAG AG AUSTRIA
Ortenburgerstrasse 27, 9800 Spittal an der Drau, Austrija ili Zetskih vladara br. 5, 81000 Podgorica, Crna Gora

Rekonstrukcija postojećih i izgradnja novih odvodnih kanala za D.O.O. „Vodovod i kanalizacija" Danilovgrad, Crna Gora, 8733-IFT-41252

Ove Promjene potrebne shodno ocjeni predloga u prvom stepenu izdate su u skladu sa stavom 20.1 Uputstava ponuđačima o tenderskoj dokumentaciji za gore navedeni ugovor.

Od ponuđača se očekuje da pažljivo provjeri „Promjene potrebne shodno ocjeni predloga u prvom stepenu".

Ako se ne dostave sve informacije, naprave promjene, ispravke ili povuku sve neusaglašenosti koje je Naručilac prepoznao u Predlogu u prvom stepenu i koje su navedene u ovim „Promjenama potrebnim shodno ocjeni predloga u prvom stepenu", to će biti na rizik ponuđača i rezultiraće odbijanjem njegove ponude.

Referenca na predlog u prvom stepenu	Opis odstupanja	Referenca u tenderskoj dokumentaciji	Promjene potrebne shodno ocjeni predloga u prvom stepenu
			Nema

28.11.2017. godine, u Danilovgradu

Ovlašćeni potpis:
(Dat potpis)
Ime i funkcija potpisnika:
Dražen Kalezić,
Presjednik Komisije za evaluaciju

Naziv Naručioca:
DOO Vodovod i kanalizacija Danilovgrad

Ovlašćeni potpis:

Ime i funkcija potpisnika:
Željko Leković,
Ovlašćeni predstavnik

Naziv Ponuđača:
STRABAG AG AUSTRIA

D.O.O. VODOVOD I KANALIZACIJA DANILOVGRAD ViK

023

STRABAG
STRABAG AG

STRABAG AG

Ortenburgerstraße 27
A-9800 Spittal/Drau, Austria

Telefon +43(0) / 4762-620-0
Telefax +43(0) / 4762-4962
www.strabag.com

D.O.O. "Vodovod i kanalizacija" Danilovgrad
Caja Scepanovica bb Danilovgrad
81410 State of Montenegro

Power of Attorney

We, the undersigned, acting in our capacity as Members of the Board or Authorised Representatives and as such being duly authorized to represent STRABAG AG, an Austrian company incorporated in accordance with the laws of the Federal Republic of Austria, registered at the Austrian Commercial Register under No. FN 61689w at the Provincial Court of Klagenfurt and with its company seat and business address at A-9800 Spittal/Drau, Ortenburgerstrasse 27, do hereby authorize:

Mr. Željko Leković
Passport No.: J56DN0632
born on 16/9/1961
resident in IV Proleteske S28, Cetinje, Montenegro

who signs as follows .....,

who put initials as follows .....,

to sign all Contract documentations and act for and on behalf of and represent STRABAG AG in all matters pertaining to the performance of works and all related documents for the following project:

DANILOVGRAD MUNICIPAL INFRASTRUCTURE PROJECT –
RECONSTRUCTION OF EXISTING AND CONSTRUCTION OF NEW SEWERS;
Tender No: EBRD ME DAN 9000
Procurement ref: 8733-IFT-41252

His signature shall be legally binding.

STRABAG AG

.....
Herbert Krutina

STRABAG AG
STRABAG AG
ORTENBURGERSTRASSE 27
A-9800 SPITTAL / DRAU

STRABAG AG

.....
Wolfgang Zechmeister

Vienna, 12.10.2018

D.O.O. VODOVOD I KANALIZACIJA VIK DANILOVGRAD

Gebühr in Höhe von € 14,30 entrichtet.
Dr. Elisabeth Neuwirth, öff. Notarin,
Wien-Neubau III

Fee € 14,30 paid.
Dr. Elisabeth Neuwirth, notary public,
Vienna-Neubau III

B.R.Zl.: 1597/18

Ich bestätige die Echtheit der Firmazeichnungen ----------

a) des Herrn Magister Herbert **KRUTINA**, geboren am 14.07.1960 (vierzehnten Juli neunzehnhundertsechzig), in seiner Eigenschaft als kollektiv vertretungsbefugtes Vorstandsmitglied, und ----------

b) des Herrn Magister Wolfgang **ZECHMEISTER**, geboren am 10.09.1962 (zehnten September neunzehnhundertzweiundsechzig), in seiner Eigenschaft als kollektiv vertretungsbefugtes Vorstandsmitglied, ----------

je der **STRABAG AG** mit dem Sitz in Spittal an der Drau und der Geschäftsanschrift 9800 Spittal an der Drau, Ortenburgerstraße 27. ----------

Gleichzeitig bestätige ich gemäß § 89a (Paragraph neunundachtzig a) der Notariatsordnung auf Grund der heute im elektronischen Weg vorgenommenen Einsicht in das Firmenbuch, dass Herr Magister Herbert Krutina und Herr Magister Wolfgang Zechmeister am 12.10.2018 (zwölften Oktober zweitausendachtzehn) berechtigt waren und heute noch berechtigt sind, die unter FN 61689w eingetragene STRABAG AG gemeinsam rechtsverbindlich zu zeichnen. ----------

Wien, am 17.10.2018 (siebzehnten Oktober zweitausendachtzehn). ----------

---

I herewith certify the authenticity of the signatures of ----------

a) Mister Magister Herbert **KRUTINA**, born 14.07.1960 (July fourteenth, nineteenhundredsixty), in his capacity as jointly authorised member of the board of directors, and ----------

b) Mister Magister Wolfgang **ZECHMEISTER**, born 10.09.1962 (September tenth, nineteenhundredsixtytwo), in his capacity as jointly authorised member of the board of directors. ----------

each of **STRABAG AG** having its registered office at Spittal an der Drau and its business address at 9800 Spittal an der Drau, Ortenburgerstraße 27. ----------

Pursuant to today's inspection of the register of companies, I certify in accordance with section eighty-nine a of the Regulations for Notaries public that Mister Magister Herbert Krutina and Mister Magister Wolfgang Zechmeister as members of the board of directors were authorised on 12.10.2018 (October twelfth, twothousandeighteen) and are authorised today to jointly represent the said STRABAG AG registered under company number 61689w. ----------

Vienna, 17.10.2018 (October seventeenth, twothousandeighteen). ----------

Dr. Elisabeth NEUWIRTH
ÖFFENTLICHE NOTARIN

öffentliche Notarin/notary public

VODOVOD I KANALIZACIJA
ViK
DANILOVGRAD

Dr. Elisabeth NEUWIRTH
ÖFFENTLICHE NOTARIN
Wien - Neubau

D.O.O. VODOVOD I KANALIZACIJA
ViK
PANILOVGRAD

STRABAG AG

Ortenburgerstraße 27
A-9800 Spittal/Drau, Austria

Telefon +43(0) / 4762-620-0
Telefax +43(0) / 4762-4962
www.strabag.com

D.O.O. "Vodovod i kanalizacija" Danilovgrad
Caja Scepanovica bb Danilovgrad
81410 State of Montenegro

Power of Attorney

We, the undersigned, acting in our capacity as Members of the Board or Authorised Representatives and as such being duly authorized to represent STRABAG AG, an Austrian company incorporated in accordance with the laws of the Federal Republic of Austria, registered at the Austrian Commercial Register under No. FN 61689w at the Provincial Court of Klagenfurt and with its company seat and business address at A-9800 Spittal/Drau, Ortenburgerstrasse 27, do hereby authorize:

Mr. Günther Hartweger
Passport No.: P4019897
born on 23.05.1967
resident in Austria

who signs as follows .....,

who put initials as follows Günther Hartweger,

Mr. Erwin Wurzer
Passport No.: P7495340
born on 18.05.1953
resident in Austria

who signs as follows .....,

who put initials as follows ERWIN WURZER,

to sign Contract Agreement on behalf of STRABAG AG for the following project:

DANILOVGRAD MUNICIPAL INFRASTRUCTURE PROJECT – RECONSTRUCTION OF EXISTING AND CONSTRUCTION OF NEW SEWERS;
Tender No: EBRD ME DAN 9000
Procurement ref: 8733-IFT-41252

Their signatures shall be legally binding.

STRABAG AG

.....
Herbert Krutina

STRABAG
STRABAG AG
ORTENBURGERSTRASSE 27
A-9800 SPITTAL / DRAU

STRABAG AG

.....
Wolfgang Zechmeister

Vienna, 12.10.2018.

VODOVOD I KANALIZACIJA DANILOVGRAD VIK

Gebühr in Höhe von € 14,30 entrichtet.
Dr. Elisabeth Neuwirth, öff. Notarin,
Wien-Neubau III

Fee € 14,30 paid.
Dr. Elisabeth Neuwirth, notary public,
Vienna-Neubau III

B.R.Zl.: 1598/18

Ich bestätige die Echtheit der Firmazeichnungen ----------

a) des Herrn Magister Herbert **KRUTINA**, geboren am 14.07.1960 (vierzehnten Juli neunzehnhundertsechzig), in seiner Eigenschaft als kollektiv vertretungsbefugtes Vorstandsmitglied, und ----------

b) des Herrn Magister Wolfgang **ZECHMEISTER**, geboren am 10.09.1962 (zehnten September neunzehnhundertzweiundsechzig), in seiner Eigenschaft als kollektiv vertretungsbefugtes Vorstandsmitglied. ----------

je der **STRABAG AG** mit dem Sitz in Spittal an der Drau und der Geschäftsanschrift 9800 Spittal an der Drau, Ortenburgerstraße 27. ----------

Gleichzeitig bestätige ich gemäß § 89a (Paragraph neunundachtzig a) der Notariatsordnung auf Grund der heute im elektronischen Weg vorgenommenen Einsicht in das Firmenbuch, dass Herr Magister Herbert Krutina und Herr Magister Wolfgang Zechmeister am 12.10.2018 (zwölften Oktober zweitausendachtzehn) berechtigt waren und heute noch berechtigt sind, die unter FN 61689w eingetragene STRABAG AG gemeinsam rechtsverbindlich zu zeichnen. ----------

Wien, am 17.10.2018 (siebzehnten Oktober zweitausendachtzehn). ----------

---

I herewith certify the authenticity of the signatures of ----------

a) Mister Magister Herbert **KRUTINA**, born 14.07.1960 (July fourteenth, nineteenhundredsixty), in his capacity as jointly authorised member of the board of directors, and ----------

b) Mister Magister Wolfgang **ZECHMEISTER**, born 10.09.1962 (September tenth, nineteenhundredsixtytwo), in his capacity as jointly authorised member of the board of directors, ----------

each of **STRABAG AG** having its registered office at Spittal an der Drau and its business address at 9800 Spittal an der Drau, Ortenburgerstraße 27. ----------

Pursuant to today's inspection of the register of companies, I certify in accordance with section eighty-nine a of the Regulations for Notaries public that Mister Magister Herbert Krutina and Mister Magister Wolfgang Zechmeister as members of the board of directors were authorised on 12.10.2018 (October twelfth, twothousandeighteen) and are authorised today to jointly represent the said STRABAG AG registered under company number 61689w. ----------

Vienna, 17.10.2018 (October seventeenth, twothousandeighteen). ----------

Dr. Elisabeth NEUWIRTH ÖFFENTLICHE NOTARIN Wien - Neubau

öffentliche Notarin/notary public

VODOVOD I KANALIZACIJA ViK NIŠ

Dr. Elisabeth NEUWIRTH
ÖFFENTLICHE NOTARIN
Wien - Neubau

VODOVOD I KANALIZACIJA
ViK
DANILOVGRAD

VOLUME I.vii

LETTER OF ACCEPTANCE

[*Date*]

TO: [*Name of successful tenderer*]

[*Address of successful tenderer*]

This is to notify you that your tender dated [*enter date*] for the execution of the "Reconstruction of existing and construction of new sewers" for the Contract Price of [*amount in numbers and words, and name of currency/currencies*], or equivalent thereof, as corrected and modified in accordance with the Instructions to Tenderers, is hereby accepted by our Agency.

You are hereby required:

(a) to submit the Performance Security [*specify as provided in the tender documents*]

(b) sign the attached Contract Agreement and return [*specify as provided in the tender documents*]; and

(c) to commence performance of the said contract in accordance with the Contract Documents.

Authorised Signature.....

Name and Title of Signatory.....

Name of Agency.....

Attachment: Contract Document

This letter of acceptance should be on the letterhead of the Employer and should be signed by a person competent and having power of attorney to bind the Employer. If the Employer intends to accept any alternatives offered by the successful tenderer, this should be stated.

IFT Number .....

SCHEDULE OF RATES AND PRICES

Schedule No. 1

SCHEDULE No. 1 - PLANT AND EQUIPMENT, INCLUDING MANDATORY SPARE PARTS, SUPPLIED FROM ABROAD

Name of tenderer _____

Tender identification No. _____

Important note: Items detail specifications and description refer to Volume III - The Requirements, document III.i Technical Specifications.

Item	Description	Quantity	Unit price CIP (border)	Unit price (other INCOTERMS)	Total price per item (1x2) or (1x3)
		1	2	3	4
1	**Sewerage system - Zone 1**				
1.1	Pumping stations - mechanical part	1.0 set			
1.2	Pumping stations - electrical part	1.0 set			
1.3	Sewerage SCADA system	1.0 set			
	Subtotal of SS - Zone 1				
2	**Sewerage system - Zone 2**				
2.1	Pumping stations - mechanical part	1.0 set			
2.2	Pumping stations - electrical part	1.0 set			
2.3	Sewerage SCADA system	1.0 set			
	Subtotal of SS - Zone 2				

052

STRABAG

Important note: Items detail specifications and description refer to Volume III - The Requirements, document III.i Technical Specifications.

Item	Description	Quantity	Unit price CIP (border)	Unit price (other INCOTERMS)	Total price per item (1x2) or (1x3)
		1	2	3	4
3	**Sewerage system - Zone 3**				
3.1	Pumping stations - mechanical part	1.0 set			
3.2	Pumping stations - electrical part	1.0 set			
3.3	Sewerage SCADA system	1.0 set			
	Subtotal of SS - Zone 3				
4	**Sewerage system - Zone 4**				
4.1	Pumping stations - mechanical part	1.0 set			
4.2	Pumping stations - electrical part	1.0 set			
4.3	Sewerage SCADA system	1.0 set			
	Subtotal of SS - Zone 4				
5	**Sewerage system - Zone 5**				
5.1	Pumping stations - mechanical part	1.0 set			
5.2	Pumping stations - electrical part	1.0 set			
5.3	Sewerage SCADA system	1.0 set			
	Subtotal of SS - Zone 5				

053

STRABAG

Important note: Items detail specifications and description refer to Volume III - The Requirements, document III.i Technical Specifications.

Item	Description	Quantity	Unit price CIP (border)	Unit price (other INCOTERMS)	Total price per item (1x2) or (1x3)
		1	2	3	4
6	**Sewerage system - Zone 6**				
6.1	Pumping stations - mechanical part	1.0 set			
6.2	Pumping stations - electrical part	1.0 set			
6.3	Sewerage SCADA system	1.0 set			
	Subtotal of SS - Zone 6				
7	**Sewerage system - Zone 7**				
7.1	Pumping stations - mechanical part	1.0 set			
7.2	Pumping stations - electrical part	1.0 set			
7.3	Sewerage SCADA system	1.0 set			
	Subtotal of SS - Zone 7				
8	**Sewerage SCADA system**				
8.1	Sewerage dispatching	1.0 set			
8.2	Mobile diesel generator up to 67 kVA / 53 kW / 85A	1.0 set			
8.3	Mobile diesel generator up to 44 kVA / 35 kW / 63A	1.0 set			
	Subtotal of Sewerage SCADA system				

054

Important note: Items detail specifications and description refer to Volume III - The Requirements, document III.i Technical Specifications.

Item	Description	Quantity	Unit price CIP (border)	Unit price (other INCOTERMS)	Total price per item (1x2) or (1x3)
		1	2	3	4
9	**Reconstructed existing sewerage system**				
9.1	Pumping stations - mechanical part				
9.2	Pumping stations - electrical part	1.0 set			
9.3	Sewerage SCADA system	1.0 set			
	Subtotal of SS	1.0 set			
				Total amount	

Signature of tenderer _____

Note:

1. In case of discrepancy between unit price and total, prices will be adjusted in accordance with Paragraph 33.3 of the Instructions to Tenderers.
2. Prices and currencies to be in accordance with Paragraphs 23 and 24 respectively of the Instructions to Tenderers.
3. Currencies are to be clearly specified in accordance with the Instructions to Tenderers.

C55

STRABAG STRABAG AG

VHS Brno, a.s.

IFT Number .....

SCHEDULE OF RATES AND PRICES

Schedule No. 2

SCHEDULE No. 2 - PLANT AND EQUIPMENT, INCLUDING MANDATORY SPARE PARTS, SUPPLIED FROM WITHIN THE EMPLOYER'S COUNTRY

Name of tenderer _____

Tender identification No. _____

Important note: Items detail specifications and description refer to Volume III - The Requirements, document III.i Technical Specifications.

Item	Description	Quantity	Unit price EXW		Import duties and taxes on directly imported components	Total price per item (1x2)	
			Foreign *	Local *		Foreign *	Local *
		1	2	3	4	5	6
1	**Sewerage system - Zone 1**						
1.1	Pumping stations - mechanical part	1.0 set					
1.2	Pumping stations - electrical part	1.0 set					
1.3	Sewerage SCADA system	1.0 set					
	Subtotal of SS - Zone 1					1x2+4	1x3+4
2	**Sewerage system - Zone 2**						
2.1	Pumping stations - mechanical part	1.0 set					
2.2	Pumping stations - electrical part	1.0 set					
2.3	Sewerage SCADA system	1.0 set					
	Subtotal of SS - Zone 2						

056

STRABAG
STRABAG AG

VHS Brno, a.s.

Important note: Items detail specifications and description refer to Volume III - The Requirements, document III.i Technical Specifications.

Item	Description	Quantity	Unit price EXW		Import duties and taxes on directly imported components	Total price per item (1x2)	
			Foreign *	Local *		Foreign *	Local *
		1	2	3	4	1x2+4	1x3+4
						5	6
3	**Sewerage system - Zone 3**						
3.1	Pumping stations - mechanical part	1.0 set					
3.2	Pumping stations - electrical part	1.0 set					
3.3	Sewerage SCADA system	1.0 set					
	Subtotal of SS - Zone 3						
4	**Sewerage system - Zone 4**						
4.1	Pumping stations - mechanical part	1.0 set					
4.2	Pumping stations - electrical part	1.0 set					
4.3	Sewerage SCADA system	1.0 set					
	Subtotal of SS - Zone 4						

057

STRABAG STRABAG AG

VHS Brno, a.s.

Important note: Items detail specifications and description refer to Volume III - The Requirements, document III.i Technical Specifications.

Item	Description	Quantity	Unit price EXW		Import duties and taxes on directly imported components	Total price per item (1x2)	
			Foreign *	Local *		Foreign *	Local *
		1	2	3	4	1x2+4	1x3+4
5	**Sewerage system - Zone 5**						
5.1	Pumping stations - mechanical part	1.0 set					
5.2	Pumping stations - electrical part	1.0 set					
5.3	Sewerage SCADA system	1.0 set					
	Subtotal of SS - Zone 5						
6	**Sewerage system - Zone 6**						
6.1	Pumping stations - mechanical part	1.0 set					
6.2	Pumping stations - electrical part	1.0 set					
6.3	Sewerage SCADA system	1.0 set					
	Subtotal of SS - Zone 6						

058

STRABAG
STRABAG AG

VHS Brno, a.s.

Important note: Items detail specifications and description refer to Volume III - The Requirements, document III.i Technical Specifications.

Item	Description	Quantity	Unit price EXW		Import duties and taxes on directly imported components	Total price per item (1x2)	
			Foreign *	Local *		Foreign *	Local *
		1	2	3	4	1x2+4 5	1x3+4 6
7	**Sewerage system - Zone 7**						
7.1	Pumping stations - mechanical part	1.0 set					
7.2	Pumping stations - electrical part	1.0 set					
7.3	Sewerage SCADA system	1.0 set					
	Subtotal of SS - Zone 7						
8	**Sewerage SCADA system**						
8.1	Sewerage dispatching	1.0 set					
8.2	Mobile diesel generator up to 67 kVA / 53 kW / 85A	1.0 set					
8.3	Mobile diesel generator up to 44 kVA / 35 kW / 63A	1.0 set					
	Subtotal of Sewerage SCADA system						

059

STRABAG STRABAG AG

VHS Brno, a.s.

Important note: Items detail specifications and description refer to Volume III - The Requirements, document III.i Technical Specifications.

Item	Description	Quantity	Unit price EXW		Import duties and taxes on directly imported components	Total price per item (1x2)	
			Foreign *	Local *		Foreign *	Local *
		1	2	3	4	5	6
9	**Reconstructed existing sewerage system**						
9.1	Pumping stations - mechanical part	1.0 set					
9.2	Pumping stations - electrical part	1.0 set					
9.3	Sewerage SCADA system	1.0 set					
	Subtotal of SS						
					Total amount		

Signature of tenderer _____

Note:

1. In case of discrepancy between unit price and total, prices will be adjusted in accordance with Paragraph 33.3 of the Instructions to Tenderers.
2. Prices and currencies to be in accordance with Paragraphs 23 and 24 respectively of the Instructions to Tenderers.
3. Currencies are to be clearly specified in accordance with the Instructions to Tenderers.

060

STRABAG

VHS Brno, a.s.

IFT Number .....

SCHEDULE OF RATES AND PRICES

Schedule No. 3

SCHEDULE No. 3 - LOCAL TRANSPORTATION

Name of tenderer _____

Tender identification No. _____

Important note: Items detail specifications and description refer to Volume III - The Requirements, document III.i Technical Specifications.

Item	Description	Quantity	Unit price*	Total price (1x2)
		1	2	3
1	**Sewerage system - Zone 1**			
1.1	Pumping stations - mechanical part	1.0 set		
1.2	Pumping stations - electrical part	1.0 set		
1.3	Sewerage SCADA system	1.0 set		
	Subtotal of SS - Zone 1			
2	**Sewerage system - Zone 2**			
2.1	Pumping stations - mechanical part	1.0 set		
2.2	Pumping stations - electrical part	1.0 set		
2.3	Sewerage SCADA system	1.0 set		
	Subtotal of SS - Zone 2			
3	**Sewerage system - Zone 3**			
3.1	Pumping stations - mechanical part	1.0 set		
3.2	Pumping stations - electrical part	1.0 set		
3.3	Sewerage SCADA system	1.0 set		
	Subtotal of SS - Zone 3			

061

STRABAG STRABAG AG

Important note: Items detail specifications and description refer to Volume III - The Requirements, document III.i Technical Specifications.

Item	Description	Quantity	Unit price*	Total price (1x2)
		1	2	3
4	**Sewerage system - Zone 4**			
4.1	Pumping stations - mechanical part	1.0 set		
4.2	Pumping stations - electrical part	1.0 set		
4.3	Sewerage SCADA system	1.0 set		
	Subtotal of SS - Zone 4			
5	**Sewerage system - Zone 5**			
5.1	Pumping stations - mechanical part	1.0 set		
5.2	Pumping stations - electrical part	1.0 set		
5.3	Sewerage SCADA system	1.0 set		
	Subtotal of SS - Zone 5			
6	**Sewerage system - Zone 6**			
6.1	Pumping stations - mechanical part	1.0 set		
6.2	Pumping stations - electrical part	1.0 set		
6.3	Sewerage SCADA system	1.0 set		
	Subtotal of SS - Zone 6			

Important note: Items detail specifications and description refer to Volume III - The Requirements, document III.i Technical Specifications.

Item	Description	Quantity	Unit price*	Total price (1x2)
		1	2	3
7	**Sewerage system - Zone 7**			
7.1	Pumping stations - mechanical part	1.0 set		
7.2	Pumping stations - electrical part	1.0 set		
7.3	Sewerage SCADA system	1.0 set		
	Subtotal of SS - Zone 7			
8	**Sewerage SCADA system**			
8.1	Sewerage dispatching	1.0 set		
8.2	Mobile diesel generator up to 67 kVA / 53 kW / 85A	1.0 set		
8.3	Mobile diesel generator up to 44 kVA / 35 kW / 63A	1.0 set		
	Subtotal of Sewerage SCADA system			
9	**Reconstructed existing sewerage system**			
9.1	Pumping stations - mechanical part	1.0 set		
9.2	Pumping stations - electrical part	1.0 set		
9.3	Sewerage SCADA system	1.0 set		
	Subtotal of SS			
	TOTAL (TO GRAND SUMMARY)			

Signature of tenderer _____

* Specify currencies in accordance with the Instructions to Tenderers.

IFT Number .....

SCHEDULE OF RATES AND PRICES

Schedule No. 4

SCHEDULE No. 4 - INSTALLATION AND OTHER SERVICES

Name of tenderer _____

Tender Identification No. _____

Important note: Items detail specifications and description refer to Volume III - The Requirements, document III.i Technical Specifications.

Item	Description	Quantity	Unit price		Total price	Total price
			Foreign Currency Portion*	Local Currency Portion*	Foreign* 1x2	Local* 1x3
		1	2	3	4	5
1	**Sewerage system - Zone 1**					
1.1	Sanitary sewerage system	1.0 set				
1.2	House connections	1.0 set				
1.3	LV connections	1.0 set				
1.4	Pumping stations - civil part	1.0 set				
1.5	Pumping stations - mechanical part	1.0 set				
1.6	Pumping stations - electrical part	1.0 set				
1.7	Sewerage SCADA system	1.0 set				
	Subtotal of SS - Zone 1					
2	**Sewerage system - Zone 2**					
2.1	Sanitary sewerage system	1.0 set				
2.2	House connections	1.0 set				
2.3	LV connections	1.0 set				
2.4	Pumping stations - civil part	1.0 set				
2.5	Pumping stations - mechanical part	1.0 set				

C64

STRABAG STRABAG AG

VHS Brno, a.s.

Important note: Items detail specifications and description refer to Volume III - The Requirements, document III.I Technical Specifications.

Item	Description	Quantity	Unit price		Total price	Total price
			Foreign Currency Portion*	Local Currency Portion*	Foreign* 1x2	Local* 1x3
		1	2	3	4	5
2.6	Pumping stations - electrical part	1.0 set				
2.7	Sewerage SCADA system	1.0 set				
	Subtotal of SS - Zone 2					
3	**Sewerage system - Zone 3**					
3.1	Sanitary sewerage system	1.0 set				
3.2	House connections	1.0 set				
3.3	LV connections	1.0 set				
3.4	Pumping stations - civil part	1.0 set				
3.5	Pumping stations - mechanical part	1.0 set				
3.6	Pumping stations - electrical part	1.0 set				
3.7	Sewerage SCADA system	1.0 set				
	Subtotal of SS - Zone 3					
4	**Sewerage system - Zone 4**					
4.1	Sanitary sewerage system	1.0 set				
4.2	House connections	1.0 set				
4.3	LV connections	1.0 set				
4.4	Pumping stations - civil part	1.0 set				
4.5	Pumping stations - mechanical part	1.0 set				
4.6	Pumping stations - electrical part	1.0 set				
4.7	Sewerage SCADA system	1.0 set				
	Subtotal of SS - Zone 4					

Important note: Items detail specifications and description refer to Volume III - The Requirements, document III.i Technical Specifications.

Item	Description	Quantity	Unit price		Total price	Total price
			Foreign Currency Portion*	Local Currency Portion*	Foreign* 1x2	Local* 1x3
		1	2	3	4	5
5	**Sewerage system - Zone 5**					
5.1	Sanitary sewerage system	1.0 set				
5.2	House connections	1.0 set				
5.3	LV connections	1.0 set				
5.4	Pumping stations - civil part	1.0 set				
5.5	Pumping stations - mechanical part	1.0 set				
5.6	Pumping stations - electrical part	1.0 set				
5.7	Sewerage SCADA system	1.0 set				
	Subtotal of SS - Zone 5	1.0 set				
6	**Sewerage system - Zone 6**					
6.1	Sanitary sewerage system	1.0 set				
6.2	House connections	1.0 set				
6.3	LV connections	1.0 set				
6.4	Pumping stations - civil part	1.0 set				
6.5	Pumping stations - mechanical part	1.0 set				
6.6	Pumping stations - electrical part	1.0 set				
6.7	Sewerage SCADA system	1.0 set				
	Subtotal of SS - Zone 6	1.0 set				
7	**Sewerage system - Zone 7**					
7.1	Sanitary sewerage system	1.0 set				
7.2	House connections	1.0 set				
7.3	LV connections	1.0 set				
7.4	Pumping stations - civil part	1.0 set				
7.5	Pumping stations - mechanical part	1.0 set				
7.6	Pumping stations - electrical part	1.0 set				

Important note: Items detail specifications and description refer to Volume III - The Requirements, document III.i Technical Specifications.

Item	Description	Quantity	Unit price		Total price	Total price
			Foreign Currency Portion*	Local Currency Portion*	Foreign* 1x2	Local* 1x3
			2	3	4	5
7.7	Sewerage SCADA system	1				
	Subtotal of SS - Zone 7	1.0 set				
8	**Sewerage SCADA system**					
8.1	Sewerage dispatching					
8.2	Mobile diesel generator up to 67 kVA / 53 kW / 85A	1.0 set				
8.3	Mobile diesel generator up to 44 kVA / 35 kW / 63A	1.0 set				
	Subtotal of Sewerage SCADA system	1.0 set				
9	Reconstructed existing sewerage system					
10	Geodetic measurements	1.0 set				
11	Engineering-geological and Hydro-geological surveys	1.0 set				
12	Main design for building permit (for the entire project scope)	1.0 set				
13	Main design for the details for execution of works (Detail design - for the entire project scope)	1.0 set				
14	As-built drawings and documents	1.0 set				
15	Other documets	1.0 set				
16	Construction site equipment	1.0 set				
17	Information table	6.0 pc				
18	Commemorative tablet	1.0 pc				
	TOTAL (TO GRAND SUMMARY)					

Signature of tenderer _____

*Specify currencies in accordance with the Instructions to Tenderers.

IFT Number .....

SCHEDULE OF RATES AND PRICES

Schedule No. 5

SCHEDULE No. 5 – GRAND SUMMARY

Name of tenderer _____

Tender identification No. _____

Item	Description	Total price Foreign Currency Portion*	Total price Local Currency Portion*
1	TOTAL SCHEDULE No. 1 Plant and Equipment, including mandatory spare parts, supplied from abroad		
2	TOTAL SCHEDULE No. 2 Plant and Equipment, including mandatory spare parts, supplied from within the Employer's country		
3	TOTAL SCHEDULE No. 3 Local Transportation		
4	TOTAL SCHEDULE No. 4 Installation and other Services		
	GRAND TOTAL (TO TENDER FORM)		

Signature of tenderer _____

* Specify currencies in accordance with the Instructions to Tenderers.

C 68

STRABAG

VHS Brno, a.s.

IFT Number .....
SCHEDULE OF RATES AND PRICES

Schedule No. 6

SCHEDULE No. 6 - RECOMMENDED SPARE PARTS

Name of tenderer _____

Tender identification No. _____

Item	Description	Quantity	Unit price*		Total price
			From abroad (CIP)	From within Employer's country (EXW)	(1x2) or (1x3)
		1	2	3	4
				Total amount	

Signature of tenderer _____

*Specify currencies in accordance with the Instructions to Tenderers.

VHS Brno, a.s.

Important note:

In accordance with Preamble in the main folder (Volume I.vii – Price Schedules – Preamble) - unless implied otherwise from the description of items in the Price Schedules No. 1 to No. 5, the unit prices shall include costs of the following:

1 Establishment, maintenance, and winding-up of the storehouses, offices, and other facilities of the Contractor (including electricity fees, water and sewage charges, fees for printing, copying and consumable supplies, and telecommunication fees);
2 Detailed setting-out of the Work performed by the Contractor;
3 Setting-out of all utility services (incl. their connections, electricity, control and signal cables, grounding, and anticorrosion protection elements) by their operators and provision of necessary permits and approvals prior to the work commencement, including fees;
4 Technical survey of existing structures;
5 Geological survey;
6 Geodetic measurements;
7 Archaeological survey for the purpose of preservation of archaeological findings and sites assumed to be discovered within the construction site in question;
8 Traffic organisation project and its approval, including fees. Installation of temporary and restoration of permanent traffic signs, incl. relevant fees;
9 Construction flood protection plan, Emergency plan for leakage of substances hazardous for water, Work safety and health protection plan, Inspection and test plan, Plan of environmental protection for the construction duration, inc. negotiations and approvals;
10 Construction site plan documents, incl. negotiations with the operators of utility lines and equipment concerned, negotiations with the owners of estates concerned and conclusions of relevant contracts;
11 Provision of all necessary permits and opinions prior to the commencement of works and during the construction, incl. fees;
12 Purchase/procurement of all materials, accessories and auxiliary construction materials, regardless of the fact whether they are included in Schedules;
13 All measures taken in connection with excavation works (sheeting, sloping, groundwater pumping, monitoring bores, technical equipment maintenance, etc.) resulting from the engineering-geological and hydro-geological surveys performed;
14 Vertical and horizontal transfer of any materials in any quantities (materials for incorporation of products, excavated soil, removed foundation and surface layers of hard-surface/unpaved roads and pavements, water pumped from trenches and foundation pits, etc.) within and outside the Site, incl. fees;
15 Loading/unloading and transport of demolished materials, debris to a landfill at any distance, incl. landfill fees;
16 Loading/unloading and transport of excessive soil to a landfill at any distance, incl. landfill fees;
17 Clearing rooms and debris removal during demolishing as well as construction works;
18 Pumping and clearing of spaces and removal of waste to a landfill at any distance, incl. landfill fees;
19 Transfer of materials to/from temporary dumping sites, incl. loading, unloading, and fees, and including establishment and maintenance of temporary dumping sites and restoring the temporary dumping sites to their original state (confirmed by the owner(s) of estates concerned);
20 Preparatory and finishing bricklaying works and other preparatory and auxiliary construction works related to the assembly of sanitary installation, air-conditioning system, construction wiring, technological equipment, fitting windows, doors and frames, etc.;
21 Delivery and assembly of all connections of piping of all materials (reducers, flanges, sleeves, etc.), delivery and assembly of connections of all piping lines (welds, sockets, couplers, flanges, etc.), incl. branches; watertight piping passages through walls of manholes, tanks, and chambers (manhole sockets, etc.). Piping connection at the border of the construction and technological deliveries.
22 Compacting of all piping and cabling beds, backfills, fills, and mounds – in 0.2-0.3m layers;
23 Auxiliary assembly materials (tubes, cable eyes, wall plugs, fasteners, marking material, warning signs, cable strips, cable bushings, etc.;
24 All auxiliary works such as construction of scaffoldings, supports, dykes, sheeting of foundation pits and trenches incl. the use of Larsen sheet piles, and their removal;

070

STRABAG STRABAG AG

25 Installation of all products and equipment, accessories and auxiliary construction materials and works;
26 Loss money;
27 Temporary piping and cable connections, passages, bypasses, and pumping for the provision of the sewerage system operation during the construction and gradual putting new structures into operation, incl. preparatory works, provision of reserve power supply and its operation;
28 Furnishing, securing, lighting, and heating of workplaces, machinery, auxiliary equipment, mechanisation, scaffoldings, storage areas and spaces, and work huts of the Contractor;
29 Partial closure and use of public communications if necessary for the work execution, incl. fees;
30 Protection of adjoining or surrounding plots against contamination or damages, removal of contamination and damages;
31 Cleaning of roads as required by valid regulations, incl. waste disposal;
32 Installation and removal of any casing used for concreting, incl. casing material supply, reinforcement in reinforced-concrete structures acc. to structural analyses and bending schedules of the Contractor;
33 Delivery, assembly, and disassembly of all parts of the temporary Work;
34 Delivery and assembly of all parts of the permanent Work, incl. connection, testing, and activation of technological equipment;
35 Establishment of temporary access roads, diversions, temporary road widening, bridging of trenches;
36 Temporary diversion of water courses incl. installation and removal of temporary dykes made of any material and piping used for this purpose;
37 Pumping of groundwater from trenches and foundation pits during the construction, incl. temporary piping and cabling connections, passages, bypasses (building, usage and removal), incl. preparatory works, provision of reserve power supply and its operation, obtaining permission and fees for discharging and possible treatment as specified by valid legislation, and incl. provision of reserve power supply and its operation;
38 Protective measures for the work executed and equipment delivered until their acceptance by the Employer;
39 Completion of the civil and building works and technological works (plant) incl. revisions, connection and activation, control measurements and adjustment of equipment, heating tests, etc.;
40 Obtaining approvals of concerned authorities and state organisations required for putting the Work into operation;
41 Elaboration of an individual (pre-commissioning) and complex (commissioning) test schedule and execution of all tests, monitoring, inspections, certificates, and revisions, incl. provision of media, connection, bleeding, filling the piping, etc., incl. preparatory works;
42 Removal of construction material from the structures built, and piping flushing and disinfection if required;
43 Works performed as resulting from the requirements of organisations and state authorities concerned;
44 General risks such as aggravated excavation conditions, adhesiveness, aggravated transport conditions, local influences, operational influences, necessary additional surveys (if executed);
45 All labour costs, taxes, Contractor's supervision, benefits, non-residence allowances, travel allowances, and expenditures;
46 Provision of compliance with requirements related to the occupational safety and health protection (poling boxes, planks, laths, ladders, securing trenches, protective gloves, helmets, footwear, etc.);
47 Provision of compliance with requirements related to the environmental protection and waste disposal including communication cleaning;
48 Provision of compliance with requirements of the quality management system;
49 Provision of compliance with requirements of road and traffic authorities (purchase/leasing, installation, and maintenance of traffic signs, railings, lighting of trenches, restoration of permanent traffic signs, etc.), incl. traffic organisation project and its approval, incl., fees;
50 All basic and secondary costs or overhead costs necessary for perfect and complex execution of works;
51 All secondary or overhead costs necessary for perfect and complex execution of works;
52 All Temporary Works not specified in the Schedules (e.g. temporary diversions, bridging trenches with light or heavy structures, repair of local communications, bridges, country lanes, and estates damaged by construction activities, re-laying bus stops, temporary access roads, etc.);
53 Loading/unloading, transport and disposal of waste, incl. all fees;

54 Expenses resulting from compensation agreements submitted by the Employer;
55 Elaboration of a plan of individual and complex tests;
56 Elaboration of a plan of training and a schedule of the beginning of activities into trial operation;
57 Training of personnel;
58 Passport of existing access roads which could be damaged or affected by the work activities of the Contractor during the construction;
59 Basic Design and Detail Design within the scope specified in Volume II.ii, incl. complete engineering activities and procurement of all necessary permits;
60 Production (works) documentation, incl. provision of necessary approvals and opinions of organisations and state authorities concerned;
61 As-built Documents including laying-out and geodetic plans for the purpose of inclusion into the cadastre within the scope specified in Volume II.ii;
62 Operation manuals during the construction, for early use of construction parts and for trial and permanent operation;
63 Elaboration of methodical instructions for the trial operation control and methodical management and evaluation of trial operation.

Profit and overhead expenses and similar charges shall be considered to be distributed evenly in all unit rates.
Items will be completed in accordance with specific design of the Contractor.

C 7 2

STRABAG STRABAG AG

VHS Brno, a.s.

STANDARD TENDER DOCUMENTS

Rehabilitation of existing and construction of new sewers

Volume I.viii

Price Schedules

(Applicable for both Single and Two-Stage Tenders)

VOLUME I.viii

PRICE SCHEDULES

PREAMBLE

General

1. The price schedules are divided into separate schedules according to Clause 22.2 of ITT.

2. The Schedules do not generally give a full description of the Plant and Equipment to be supplied and the services to be performed under each item. Tenderers shall be deemed to have read the Technical Specifications and other volumes of the tender documents and to have reviewed the Drawings to ascertain the full scope of the requirements included in each item prior to filling in the rates and prices. The entered rates and prices shall be deemed to include for the full scope as aforesaid, including overheads and profit.

   In order to complement price schedules, tenderers are provided Bill of Quantities for information purposes only. However, Tenderers shall bear full responsibility for pricing the works according to requirements.

3. If tenderers are unclear or uncertain as to the scope of any item, they shall seek clarification in accordance with the Instructions to Tenderers in the tender documents prior to submitting their tender.

4. The Price Schedules shall be read in conjunction with the several documents forming the Contract including General Conditions of Contract, Conditions of Particular Application, Schedules, Appendices, Drawings, Annexures and Addendums.

5. The rates and prices entered in the priced Price Schedules according to Clause 22.3 of ITT shall, unless expressly stated otherwise in the Contract, include for the comprehensive costs of carrying out the work in accordance with the requirements of the Contract including without limitation for all Contractor's Equipment, labor, materials, setting-out, trials, obtaining approvals, erection, Temporary Works, work of rectification, supervision, maintenance, insurance, profit, taxes and duties, together with the costs of all risks, liabilities and obligations that are set out in or can reasonably be inferred from the Contract and including the rectification of any defects during the Defect Liability Period.

6. A rate of unit price shall be entered against each item in the Price Schedules, weather quantities are stated or not. The cost of items against which Contractor has failed to enter a rate or price shall be deemed to be covered by other rates and prices entered in the Price Schedules.

7. The whole cost of complying with the previsions of the Contract shall be included in the items provided in the priced Price Schedules and where no items are provided the cost shall be deemed to be distributed among the rates and prices entered for the related items of work. References to the relevant sections of the contract documentation shall be made before entering rates or prices against each item in the Price Schedules.

8. The completed work based on measurement shall be approved in accordance with the following requirements due to actual quantity supplied or work done. The Project Manager shall agree or

determine the value of those parts of works, which are to be measured. Measurement shall be made of the net actual quantities of those works notwithstanding local practice.

Wherever any Permanent Works are to measured by records, they shall be prepared by the Contractor. The Contractor shall examine and agree the records with the Project Manager.
Whenever the Project Manager requires any part of the Works to be re-measured, reasonable notice shall be given to the Contractor, who shall:

(i) promptly either attend or send another qualified representative to assist the Project Manager in making measurement, and
(ii) supply any particulars requested by the Engineer.

If the Contractor fails to attend or send a representative, the re-measurement made by (or on behalf of) the Project Manager shall be accepted as accurate.

Pricing

9. Prices shall be entered in indelible ink, and any alterations necessary due to errors etc. shall be initialled by the tenderer.
As specified in the Tender Data, prices shall be fixed and firm for the duration of the Contract, or prices shall be subject to adjustment in accordance Contract Agreement.

10. Tender prices shall be quoted in the manner indicated and in the currencies specified in the Instructions to Tenderers in the tender documents.

For each item, tenderers shall complete each appropriate column in the respective Schedules, giving the price breakdown as indicated in the Schedules.

Prices given in the Schedules for each item shall be for the scope covered by that item as detailed in the Technical Specifications, Drawings or elsewhere in the tender documents.

11. Where there are discrepancies between the total of the amounts in the column for the price breakdown and the amount in the column for the total price, the former shall prevail and the latter will be corrected accordingly.

Where there are discrepancies between the total of the amounts of Schedules 1 to 4 and the amount given in Schedule 5 (Grand Summary), prices will be adjusted in accordance with Paragraph 34. of the Instructions to Tenderers.

Where there are discrepancies between amounts stated in figures and amounts stated in words, the amounts stated in words shall prevail.

12. Payments will be made to the Contractor in the currency or currencies indicated under each respective item.

13. Items left blank will be deemed to have been included in prices for other items. The total for each schedule and the total of the Grand Summary shall be deemed to be the total price for executing the Facilities and sections thereof in complete accordance with the Contract, whether or not each individual item has been priced.

14. When requested by the Employer for the purposes of making payments or part payments, calculating variations or evaluating claims, or for such other purposes as the Employer may reasonably require, the Contractor shall provide the Employer with a breakdown of any composite or lump sum items included in the Schedules.

IFT Number .....

Schedule No. 1
PAGE 1 OF 6

SCHEDULE OF RATES AND PRICES

SCHEDULE NO.1 - PLANT AND EQUIPMENT, INCLUDING MANDATORY SPARE PARTS SUPPLIED FROM ABROAD

Name of tenderer _____ Page __ of ___

Tender identification no. EBRD ME DAN 9000

Important note: Items detail specifications and description refer to Volume III - The Requirements, document III.i Technical Specifications.

Item	Description	Quantity	Unit price CIP (border)	Unit price (other INCOTERMS)	Total price per item (1x2) or (1x3)
		1	2	3	4
1	**Sewerage system - Zone 1**	**1.0 set**			
2	**Sewerage system - Zone 2**	**1.0 set**			
3	**Sewerage system - Zone 3**	**1.0 set**			
4	**Sewerage Dispatching**	**1.0 set**			
5	**Reconstruction of existing sewerage**	**1.0 set**			
				Total amount	

Signature of tenderer _____

Note:

1. In case of discrepancy between unit price and total, prices will be adjusted in accordance with Paragraph 33.3 of the Instructions to Tenderers.
2. Prices and currencies to be in accordance with Paragraphs 23 and 24 respectively of the Instructions to Tenderers.
3. Currencies are to be clearly specified in accordance with the Instructions to Tenderers.

IFT Number .....

Schedule No. 2
PAGE 2 OF 6

SCHEDULE OF RATES AND PRICES
SCHEDULE No.2 - PLANT AND EQUIPMENT SUPPLIED FROM WITHIN THE EMPLOYER'S COUNTRY

Name of tenderer _____

Page __ of __

Tender identification no. EBRD ME DAN 9000

Important note: Items detail specifications and description refer to Volume III - The Requirements, document III.i Technical Specifications.

Item	Description	Quantity	Unit price EXW		Import duties and taxes on directly imported components	Total price per item (1x2)	
			Foreign *	Local *		Foreign * 1x2+4	Local * 1x3+4
		1	2	3	4	5	6
1	Sewerage system - Zone 1	1.0 set					
2	Sewerage system - Zone 2	1.0 set					
3	Sewerage system - Zone 3	1.0 set					
4	Sewerage Dispatching	1.0 set					
5	Reconstruction of existing sewerage	1.0 set					
					Total amount		

Signature of tenderer _____

Note:

1. In case of discrepancy between unit price and total, prices will be adjusted in accordance with Paragraph 33.3 of the Instructions to Tenderers.
2. Prices and currencies to be in accordance with Paragraphs 23 and 24 respectively of the Instructions to Tenderers.
3. Currencies are to be clearly specified in accordance with the Instructions to Tenderers.

IFT Number .....

Schedule No. 3
PAGE 3 OF 6

SCHEDULE OF RATES AND PRICES

SCHEDULE No.3 - LOCAL TRANSPORTATION

Name of tenderer _____ Page __ of __

Tender identification no. EBRD ME DAN 9000

Important note: Items detail specifications and description refer to Volume III - The Requirements, document III.i Technical Specifications.

Item	Description	Quantity	Unit price*	Total price (1x2)
		1	2	3
1	**Sewerage system - Zone 1**	**1.0 set**		
2	**Sewerage system - Zone 2**	**1.0 set**		
3	**Sewerage system - Zone 3**	**1.0 set**		
4	**Sewerage Dispatching**	**1.0 set**		
5	**Reconstruction of existing sewerage**	**1.0 set**		
	TOTAL (TO GRAND SUMMARY)			

Signature of tenderer _____

*Specify currencies in accordance with the Instructions to Tenderers.

IFT Number .....

Schedule No.4
PAGE 4 OF 6

SCHEDULE OF RATES AND PRICES

SCHEDULE No.4 - INSTALLATION AND OTHER SERVICES

Name of tenderer _____

Page __ of __

Tender identification no. EBRD ME DAN 9000

Important note: Items detail specifications and description refer to Volume III - The Requirements, document III.i Technical Specifications.

Item	Description	Quantity	Unit price		Total price	
			Foreign Currency Portion*	Local Currency Portion*	Foreign * 1x2	Loc * 1x
		1	2	3	4	5
1	**Sewerage system - Zone 1**	**1.0 set**				
2	**Sewerage system - Zone 2**	**1.0 set**				
3	**Sewerage system - Zone 3**	**1.0 set**				
4	**Sewerage SCADA system**	**1.0 set**				
5.	**Reconstruction of existing sewerage**	**1.0 set**				
6	**Design of main project including 7 zones, reconstruction of existing sewerage network and dispatching**	**1.0 set**				
	TOTAL (TO GRAND SUMMARY)					

Signature of tenderer _____

*Specify currencies in accordance with the Instructions to Tenderers.

IFT Number .....

Schedule No.5
PAGE 5 OF 6

SCHEDULE OF RATES AND PRICES

SCHEDULE No. 5 - GRAND SUMMARY

Name of tenderer _____ Page __ of __

Tender identification no. EBRD ME DAN 9000

Item	Description	Total price Foreign Currency Portion*	Total price Local Currency Portion*
1	**TOTAL SCHEDULE No. 1** **Plant and Equipment, including mandatory spare parts, supplied from abroad**		
2	**TOTAL SCHEDULE No. 2** **Plant and Equipment, including mandatory spare parts, supplied from within the Employer's country**		
3	**TOTAL SCHEDULE No. 3** **Local Transportation**		
4	**TOTAL SCHEDULE No. 4** **Installation and other Services**		
	GRAND TOTAL (TO TENDER FORM)		

Signature of tenderer _____

*Specify currencies in accordance with the Instructions to Tenderers.

IFT Number .....

Schedule No.6
PAGE 6 OF 6

SCHEDULE OF RATES AND PRICES

SCHEDULE No.6 - RECOMMENDED SPARE PARTS

Name of tenderer _____ Page __ of __

Tender identification no. EBRD ME DAN 9000

Item	Description	Qty.	UNIT PRICE*		TOTAL PRICE (1 x 2 x 3)
			From abroad (CIP)	From within Employer's country (EXW)	
		1	2	3	4
				Total amount	

Signature of tenderer _____

* Specify currencies in accordance with the Instructions to Tenderers.

Important note:

In accordance with Preamble in the main folder (Volume I.vii – Price Schedules – Preamble) - unless implied otherwise from the description of items in the Price Schedules No. 1 to No. 5, the unit prices shall include costs of the following:

1 Establishment, maintenance, and winding-up of the storehouses, offices, and other facilities of the Contractor (including electricity fees, water and sewage charges, fees for printing, copying and consumable supplies, and telecommunication fees);

2 Detailed setting-out of the Work performed by the Contractor;

3 Setting-out of all utility services (incl. their connections, electricity, control and signal cables, grounding, and anticorrosion protection elements) by their operators and provision of necessary permits and approvals prior to the work commencement, including fees;

4 Technical survey of existing structures;

5 Geological survey;

6 Geodetic measurements;

7 Archaeological survey for the purpose of preservation of archaeological findings and sites assumed to be discovered within the construction site in question;

8 Traffic organisation project and its approval, including fees. Installation of temporary and restoration of permanent traffic signs, incl. relevant fees;

9 Construction flood protection plan, Emergency plan for leakage of substances hazardous for water, Work safety and health protection plan, Inspection and test plan, Plan of environmental protection for the construction duration, inc. negotiations and approvals;

10 Construction site plan documents, incl. negotiations with the operators of utility lines and equipment concerned, negotiations with the owners of estates concerned and conclusions of relevant contracts;

11 Provision of all necessary permits and opinions prior to the commencement of works and during the construction, incl. fees;

12 Purchase/procurement of all materials, accessories and auxiliary construction materials, regardless of the fact whether they are included in Schedules;

13 All measures taken in connection with excavation works (sheeting, sloping, groundwater pumping, monitoring bores, technical equipment maintenance, etc.) resulting from the engineering-geological and hydro-geological surveys performed;

14 Vertical and horizontal transfer of any materials in any quantities (materials for incorporation of products, excavated soil, removed foundation and surface layers of hard-surface/unpaved roads and pavements, water pumped from trenches and foundation pits, etc.) within and outside the Site, incl. fees;

15 Loading/unloading and transport of demolished materials, debris to a landfill at any distance, incl. landfill fees;

16 Loading/unloading and transport of excessive soil to a landfill at any distance, incl. landfill fees;

17 Clearing rooms and debris removal during demolishing as well as construction works;

18 Pumping and clearing of spaces and removal of waste to a landfill at any distance, incl. landfill fees;

19 Transfer of materials to/from temporary dumping sites, incl. loading, unloading, and fees, and including establishment and maintenance of temporary dumping sites and restoring the temporary dumping sites to their original state (confirmed by the owner(s) of estates concerned);

20 Preparatory and finishing bricklaying works and other preparatory and auxiliary construction works related to the assembly of sanitary installation, air-conditioning system, construction wiring, technological equipment, fitting windows, doors and frames, etc.;

21 Delivery and assembly of all connections of piping of all materials (reducers, flanges, sleeves, etc.), delivery and assembly of connections of all piping lines (welds, sockets, couplers, flanges, etc.), incl. branches; watertight piping passages through walls of manholes, tanks, and chambers (manhole sockets, etc.). Piping connection at the border of the construction and technological deliveries.

22 Compacting of all piping and cabling beds, backfills, fills, and mounds – in 0.2-0.3m layers;

22 Auxiliary assembly materials (tubes, cable eyes, wall plugs, fasteners, marking material, warning signs, cable strips,

cable bushings, etc.;

All auxiliary works such as construction of scaffoldings, supports, dykes, sheeting of foundation pits and trenches incl. the use of Larsen sheet piles, and their removal;

Installation of all products and equipment, accessories and auxiliary construction materials and works;

Loss money;

Temporary piping and cable connections, passages, bypasses, and pumping for the provision of the sewerage system operation during the construction and gradual putting new structures into operation, incl. preparatory works, provision of reserve power supply and its operation;

Furnishing, securing, lighting, and heating of workplaces, machinery, auxiliary equipment, mechanisation, scaffoldings, storage areas and spaces, and work huts of the Contractor;

Partial closure and use of public communications if necessary for the work execution, incl. fees;

Protection of adjoining or surrounding plots against contamination or damages, removal of contamination and damages;

Cleaning of roads as required by valid regulations, incl. waste disposal;

Installation and removal of any casing used for concreting, incl. casing material supply, reinforcement in reinforced-concrete structures acc. to structural analyses and bending schedules of the Contractor;

Delivery, assembly, and disassembly of all parts of the temporary Work;

Delivery and assembly of all parts of the permanent Work, incl. connection, testing, and activation of technological equipment;

Establishment of temporary access roads, diversions, temporary road widening, bridging of trenches;

Temporary diversion of water courses incl. installation and removal of temporary dykes made of any material and piping used for this purpose;

Pumping of groundwater from trenches and foundation pits during the construction, incl. temporary piping and cabling connections, passages, bypasses (building, usage and removal), incl. preparatory works, provision of reserve power supply and its operation, obtaining permission and fees for discharging and possible treatment as specified by valid legislation, and incl. provision of reserve power supply and its operation;

Protective measures for the work executed and equipment delivered until their acceptance by the Employer;

Completion of the civil and building works and technological works (plant) incl. revisions, connection and activation, control measurements and adjustment of equipment, heating tests, etc.;

Obtaining approvals of concerned authorities and state organisations required for putting the Work into operation;

Elaboration of an individual (pre-commissioning) and complex (commissioning) test schedule and execution of all tests, monitoring, inspections, certificates, and revisions, incl. provision of media, connection, bleeding, filling the piping, etc., incl. preparatory works;

Removal of construction material from the structures built, and piping flushing and disinfection if required;

Works performed as resulting from the requirements of organisations and state authorities concerned;

General risks such as aggravated excavation conditions, adhesiveness, aggravated transport conditions, local influences, operational influences, necessary additional surveys (if executed);

All labour costs, taxes, Contractor's supervision, benefits, non-residence allowances, travel allowances, and expenditures;

Provision of compliance with requirements related to the occupational safety and health protection (poling boxes, planks, laths, ladders, securing trenches, protective gloves, helmets, footwear, etc.);

Elaboration and Provision of compliance with requirements related to the environmental protection and waste disposal including communication cleaning;

Provision of compliance with requirements of the quality management system;

8
4 Provision of compliance with requirements of road and traffic authorities (purchase/leasing, installation, and
9 maintenance of traffic signs, railings, lighting of trenches, restoration of permanent traffic signs, etc.), incl. traffic organisation project and its approval, incl., fees;
5 All basic and secondary costs or overhead costs necessary for perfect and complex execution of works;
0
5 All secondary or overhead costs necessary for perfect and complex execution of works;
1
5 All Temporary Works not specified in the Schedules (e.g. temporary diversions, bridging trenches with light or
2 heavy structures, repair of local communications, bridges, country lanes, and estates damaged by construction activities, re-laying bus stops, temporary access roads, etc.);
5 Loading/unloading, transport and disposal of waste, incl. all fees;
3
5 Expenses resulting from compensation agreements submitted by the Employer;
4
5 Elaboration of a plan of individual and complex tests;
5
5 Elaboration of a plan of training and a schedule of the beginning of activities into trial operation;
6
5 Training of personnel;
7
5 Passport of existing access roads which could be damaged or affected by the work activities of the Contractor
8 during the construction;
5 Basic Design and Detail Design within the scope specified in Volume II.ii, incl. complete engineering activities
9 and procurement of all necessary permits;
6 Production (works) documentation, incl. provision of necessary approvals and opinions of organisations and state
0 authorities concerned;
6 As-built Documents including laying-out and geodetic plans for the purpose of inclusion into the cadastre within
1 the scope specified in Volume II.ii;
6 Operation manuals during the construction, for early use of construction parts and for trial and permanent
2 operation;
6 Elaboration of methodical instructions for the trial operation control and methodical management and evaluation of
3 trial operation.

Profit and overhead expenses and similar charges shall be considered to be distributed evenly in all unit rates.

Items will be completed in accordance with specific design of the Contractor.

VOLUME I. ix.

SCHEDULE OF SUPPLEMENTARY INFORMATION

We acknowledge that this Schedule of Supplementary Information accompanies our Tender. Any information provided herein shall be subject to adjustment in accordance with the Contract.

Schedule of Supplementary Information consist of the following information:

a) Attachment 1 - Tenderers Qualifications

i)	Form ELI - 1:	Tenderer's Information Sheet
ii)	Form ELI - 2:	JVCA Information Sheet
iii)	Form CON - 2:	Historical Contract Non-Performance
iv)	Form FIN - 1:	Financial Situation
v)	Form FIN - 2:	Average Annual Construction Turnover
vi)	Form FIN - 3:	Financial Resources
vii)	Form FIN - 4:	Current Contract Commitments / Works in Progress
viii)	Form EXP - 1:	General Construction Experience
ix)	Form EXP - 2:	Specific Construction Experience

b) Attachment 2 - Preliminary Programme

i) Site Organisation and Method Statement
ii) Mobilisation and Construction Schedules
iii) Contractor's Equipment
iv) Contractor's Personnel

c) Attachment 3 - Other Information

i) List of Proposed Subcontractors
ii) Details of Proposed Insurers
iii) Details of Proposed Bank Issuing Performance Securities.

Note: All forms shall be signed by the person(s) authorized to sign the Tender.

086

VOLUME I. ix.

ATTACHMENT 1 - TENDERERS QUALIFICATIONS

087

Form ELI - 1: Tenderer's Information Sheet

1.1.1.1.1 Tenderer's Information	
Tenderer's legal name	*STRABAG AG AUSTRIA*
In case of JVCA, legal name of each partner	
Tenderer's country of constitution	*AUSTRIA*
Tenderer's year of constitution	*10.01.1930*
Tenderer's legal address in country of constitution	*Ortenburgerstrasse 27, 9800 Spittal an der Drau, Vienna, Austria* *Branch Office in Montenegro: Zetskih vladara No. 5, 81000 Podgorica, Montenegro*
Tenderer's authorized representative (name, address, telephone numbers, fax numbers, e-mail address)	Name: *Željko Leković* Address: Zetskih vladara 5, Podgorica Telephone/Fax numbers: *+382(0)20/448 300 / +382(0)20/448 333* E-mail address: *zeljko.lekovic@strabag.com* *zeljko.lekovic@crnagoraput.me*

Attached are copies of the following original documents.

☒1. In case of single entity, articles of incorporation or constitution of the legal entity named above, in accordance with ITT, Clause 3.

☒2. Authorization to represent the firm or JVCA named in above, in accordance with ITT 10.2.

☐ 3. In case of JVCA, letter of intent to form JVCA or JVCA agreement, in accordance with ITT 10.2.

☐ 4. In case of a government-owned entity, any additional documents not covered under 1 above required to comply with ITT, Clause 3.

VODOVOD I KANALIZACIJA VIK DANILOVGRAD

088

STRABAG
STRABAG AG

STRABAG AG

Ortenburgerstraße 27
A-9800 Spittal/Drau, Austria

Phone +43(0) / 4762-620-0
Fax +43(0) / 4762-4962
www.strabag.com

Declaration of General Professional Reliability

I (we) herewith declare that the last five years

- neither I (we) nor any physical members of the management have been validly convicted of membership in a criminal organisation (§ 278a *StGB* [Austrian Penal Code]), bribery (§ 302, 307, 308 and 310 *StGB*; § 10 *UWG* [Federal Law against unfair trade practices]), fraud (§§ 146 ff *StGB*), embezzlement (§ 153 *StGB*), acceptance of gifts (§ 153a *StGB*), misuse of public support funds (§ 153b *StGB*) or money laundering (§ 165 *StGB*) or any corresponding criminal offence in accordance with the national laws of the country in which the entrepreneur is incorporated.
- no bankruptcy or insolvency proceedings, composition in bankruptcy, composition proceedings or compulsory settlement proceedings have been initiated against me (us) and no bankruptcy proceedings have been dismissed due to lack of assets.
- I (we) am (are) neither in liquidation nor am (are) I (we) suspending or have I (we) suspended my (our) trade activities.
- neither I (we) nor any physical members of the management have been validly convicted of any offence that would cast doubt upon my (our) professional reliability.
- I (we) have not committed any serious offences, in particular in violation of the provisions of labour, social or environmental law, within the scope of my (our) professional activity.
- I (we) am (are) not in arrears with my (our) obligations to pay social insurance contributions and to pay taxes and duties.
- I (we) have not been guilty of significant misrepresentations in the provision of information with regard to the power of authority, professional reliability, technical capacity, as well as financial and economic capacity, nor have I (we) failed to provide such information.

Vienna, 28.06.2017

STRABAG AG

.....
Manfred Rosenauer

STRABAG AG

.....
Markus Engerth

089

STRABAG
STRABAG AG

[Round seal: Dr. Elisabeth Neuwirth, Notary Public, Vienna-Neubau]

REPUBLIC OF AUSTRIA
REGISTER OF COMPANIES

FB

Date: 22 August 2017 | Updated Extract | FN 61689 w

This extract is based on the main ledger, supplemented by data from the document collection.
Last entry on 9 August 2017, entry number 281
Court of competent jurisdiction: Provincial Court Klagenfurt

1 formerly Commercial Court Vienna HRB 39101
Initial entry on 10 January 1930

COMPANY
60 STRABAG AG

LEGAL FORM
60 Stock corporation

SEAT in
57 political municipality Spittal an der Drau

BUSINESS ADDRESS
54 Ortenburgerstraße 27
9800 Spittal an der Drau

CAPITAL
79 EUR 12,000,000

TYPE of STOCK
138 1,500,000 shares of stock

ANNUAL BALANCE SHEET DATE
1 31 December

FINANCIAL STATEMENT (last entered; for more, see history)
280 As of 31 December 2016, submitted on 11 July 2017

CONSOLIDATED FINANCIAL STATEMENT (last entered; for more, see history)
39 As of 31 December 1998, submitted on 21 June 1999

REPRESENTATION
60 If more than one executive is appointed, the company shall be represented jointly by two executives or by any one executive together with an authorised signatory ("Prokurist").
The Supervisory Board is authorised to grant one, more or all the executives independent power of representation, or to define special representation rules.

OTHER PROVISIONS

155 The Executive Board consists of one or more, but not more than twenty-five members.

FORM of ANNOUNCEMENT
60 Announcements by the company are made in the official gazette of the Wiener Zeitung.

39 Resolution by the Shareholders' Meeting dated 26 May 1999

C90

Mag. phil. Ingrid Neff
Allgem. beeideter und gerichtlich zertifizierter Dolmetsch für Englisch
020

STRABAG
STRABAG AG
22.08.2017

Conversion of
Stuag Bau-Aktiengesellschaft
(FN 61689 w)
into a public limited company pursuant to §§ 239 ff, Corporations Act

43 Merger agreement dated 15 July 1999 022

43 Resolution by the Shareholders' Meeting dated 15 July 1999, of 023
Rella Baugesellschaft m.b.H.
(FN 72944 x)
as the transferring company. Merger with this company as the transferee. Seat of the transferring company in Vienna

76 Resolution by the Shareholders' Meeting dated 10 July 2000 024
Revision of the Statute.

56 Resolution by the Shareholders' Meeting dated 10 July 2000 025
Split for acceptance of a part of the assets of
Strabag Österreich GmbH
(FN 165627 w)
namely
the part of business "construction business" pursuant to the splitting and take-over agreement dated 2 June 2000.

58 Resolution by the Shareholders' Meeting dated 10 July 2000 026
Split for acceptance of a part of the assets of
ILBAU Gesellschaft m.b.H.
(FN 88888 v)
namely
the part of business "construction business" pursuant to the splitting and take-over agreement dated 2 June 2000.

59 Resolution by the Shareholders' Meeting dated 10 July 2000 027
Split

59 for acceptance by 028
ASPHALT & BETON GmbH
(FN 171708 m)
through transfer of the
part of business "asphalt mixers, gravel and earth, and concrete mixers" pursuant to the splitting and take-over agreement dated 2 June 2000.

65 Statute dated 10 July 2000 029

65 Resolution by the Shareholders' Meeting dated 10 July 2000 030
Conversion of
STRABAG GmbH
(FN 61689 w)
into a stock corporation pursuant to §§ 245 ff, Corporations Act

64 Merger agreement dated 6 September 2000 031

64 Resolution by the Shareholders' Meeting dated 6 September 2000 032
This company as the acquiring company
has been merged with the company
Dipl.Ing. Brandstetter & Co.
Baugesellschaft m.b.H.
(FN 101500 s)
as the transferring company.
Seat of the transferring company in Vienna.

Mag. phil. Ingrid Neff
Allgem. beeideter und gerichtlich zertifizierter Dolmetsch für Englisch

66 Merger agreement dated 6 September 2000 033

66 Resolution by the Shareholders' Meeting dated 6 September 2000 034
This company as the acquiring company
has been merged with the company

091

STRABAG
STRABAG AG 22.08.2017

Ing. Felix Penka G.m.b.H.
(FN 97221 y)
as the transferring company.
Seat of the transferring company in Vienna.

68 Merger agreement dated 6 September 2000

68 Resolution by the Shareholders' Meeting dated 6 September 2000 035
This company as the acquiring company 036
has been merged with the company
SÜDWESTBAU Ges.m.b.H.
(FN 66954 m)
as the transferring company.
Seat of the transferring company in Leibnitz.

69 Merger agreement dated 6 September 2000

69 Resolution by the Shareholders' Meeting dated 6 September 2000 037
This company as the acquiring company 038
has been merged with the company
A. u. H. Zisser Gesellschaft m.b.H.
(FN 118232 x)
as the transferring company.
Seat of the transferring company in Vienna.

70 Merger agreement dated 6 September 2000

70 Resolution by the Shareholders' Meeting dated 6 September 2000 039
This company as the acquiring company 040
has been merged with the company
Dipl. Ing. Kaltenegger Gesellschaft m.b.H.
(FN 79218 y)
as the transferring company.
Seat of the transferring company in Fohnsdorf.

71 Merger agreement dated 6 September 2000

71 Resolution by the Shareholders' Meeting dated 6 September 2000 041
This company as the acquiring company 042
has been merged with the company
Innerebner Hoch- und Tiefbau GmbH
(FN 157690 y)
as the transferring company.
Seat of the transferring company in Innsbruck.

72 Merger agreement dated 6 September 2000

72 Resolution by the Shareholders' Meeting dated 6 September 2000 043
This company as the acquiring company 044
has been merged with the company
K BAU Gesellschaft m.b.H.
(FN 179194 x)
as the transferring company.
Seat of the transferring company in Klagenfurt.

67 Take-over of the assets of
Ing. Herbert Fischer Gesellschaft m.b.H. & Co. KG. 045
(FN 8843 f)
in accordance with § 142 of the Austrian Commercial Code.

79 Statute amended in accordance with 1. Euro-JuBeG in a
resolution by the Shareholders' Meeting dated 20 June 2001 046
Capital increase with corporate funds from
EUR 10,900,925.13 by EUR 1,099,074.87 to
EUR 12,000,000.- resolved and implemented.
Amendment to the Statute, §§ 4, 17 and 23

092

Mag. phil. Ingrid Neff
Allgem. beeideter und gerichtlich zertifizierter Dolmetsch für Englisch

STRABAG
STRABAG AG

78 Resolution by the Shareholders' Meeting dated 20 June 2001 047
Amendment to the Statute, §§ 4 and 17

81 Merger agreement dated 14 September 2001

81 Resolution by the Shareholders' Meeting dated 14 September 2001 048
This company as the acquiring company 049
has been merged with the company
"KONSTRUKTIVA" Projektentwicklung
und Bauträger GmbH
(FN 31579 s)
as the transferring company.
Seat of the transferring company in Vienna.

82 Merger agreement dated 14 September 2001

82 Resolution by the Shareholders' Meeting dated 14 September 2001 050
This company as the acquiring company 051
has been merged with the company
SF-BAU Projektentwicklung
Gesellschaft m.b.H.
(FN 36198 h)
as the transferring company.
Seat of the transferring company in Vienna.

83 Merger agreement dated 14 September 2001

83 Resolution by the Shareholders' Meeting dated 14 September 2001 052
This company as the acquiring company 053
has been merged with the company
Zeller - Bauunternehmung
Gesellschaft m.b.H.
(FN 36208 y)
as the transferring company.
Seat of the transferring company in Innsbruck.

85 Take-over of the assets of
Baumaschinen Leasing 054
Gesellschaft m.b.H. & Co. KG
(FN 19926 d)
in accordance with § 142 of the Austrian Commercial Code.

109 Resolution by the Shareholders' Meeting dated 9 April 2003 055
Amendment to the Statute, § 7.

138 Resolution by the Shareholders' Meeting dated 27 June 2005 056
Amendment to the Statute, § 7.

155 Resolution by the Shareholders' Meeting dated 19 January 2007 057
Amendment to the Statute, § 7.

212 Resolution by the Shareholders' Meeting dated 2 July 2012 058
Amendment to the Statute, §§ 3, 5, 6, 9, 16 and 22.

243 Company purchase contract dated 21 August 2014 059
Transfer of the business unit flue gas purification of STRABAG Energy Technologies GmbH (FN 297520 f) and STRABAG AG (FN 61689 w) to the company YARA Environmental Technologies GmbH (FN 419828 w)
Exclusion of liability as set out in § 38 Par. 4 *UGB* [Austrian Business Code]
Exclusion of liability of YARA Environmental Technologies GmbH for any liabilites of the business unit flue gas purification of STRABAG Energy Technologies GmbH (FN 297520 f) and STRABAG AG (FN 61689 w) not explicitly taken over in the company purchase contract dated 21 August 2014.

093

Mag. phil. Ingrid Neff
Allgem. beeideter und gerichtlich zertifizierter Dolmetsch für Englisch

047
048
156

EXECUTIVES

CC Gerhard Biswanger, born 12 August 1957
156 member
represents the company jointly with another executive or with an authorised signatory since 28 February 2007

CP Ing Theodor Klais, born 9 April 1953
104 member
represents the company jointly with another executive or with an authorised signatory since 1 January 2003

DI Franz Urban, born 20 January 1960
271 member
represents the company jointly with another executive or with an authorised signatory since 1 March 2017

DL Mag Wolfgang Zechmeister, born 10 September 1962
154 represents the company jointly with another executive or with an authorised signatory since 1 January 2007

HC Mag Ing Manfred Rosenauer, born 11 April 1957
104 member
represents the company jointly with another executive or with an authorised signatory since 1 January 2003

HN Markus Engerth, born 1 June 1968
274 member
represents the company jointly with another executive or with an authorised signatory since 1 April 2017

HP Ing Reinhard Kerschner, born 6 March 1966
241 represents the company jointly with another executive or with an authorised signatory since 1 November 2014

HR Marina Humitsch, born 28 August 1958
146 member
represents the company jointly with another executive or with an authorised signatory since 30 March 2006.

HU Mag Herbert Krutina, born 14 July 1960
132 member
represents the company jointly with another executive or with an authorised signatory since 1 January 2005

IS Dipl Ing Dragan Pavelic, born 17 March 1956
223 represents the company jointly with another executive or with an authorised signatory since 1 January 2013

KT Gerald Kienast, born 24 September 1965
156 member
represents the company jointly with another executive or with an authorised signatory since 28 February 2007

LJ Alexander Ortenberg, born 28 April 1966
159 represents the company jointly with another executive or with an authorised signatory since 26 September 2007

OH Dipl.-Ing. (FH) Edgar Schömig, born 1 October 1956
225 represents the company jointly with another executive or with an authorised signatory since 1 April 2013

OJ Karsten Richter, born 18 November 1959
233 represents the company jointly with another executive or with an authorised signatory since 1 January 2014

SIGNATORY ("PROKURIST")

BS Mag. Gerold Laubreiter, born 30 November 1962
123 represents the company jointly with an executive or with another authorised signatory since 1 March 2004

DC Ing Günther Rossbory, born 20 May 1953
62 represents the company jointly with an executive or with another authorised signatory since 5 September 2000

DM Dipl-Ing Alfred Zeiler, born 28 August 1957
62 represents the company jointly with an executive or with another authorised signatory since 5 September 2000

DO Ing Manfred Aschaber, born 8 March 1958
116 represents the company jointly with an executive or with another authorised signatory since 30 September 2003.

DU Dipl-Ing Werner Kunz, born 20 November 1956
62 represents the company jointly with an executive or with

Mag. phil. Ingrid Neff
Allgem. beeideter und gerichtlich zertifizierter Dolmetsch für Englisch

STRABAG
STRABAG AG

another authorised signatory since 5 September 2000, whereby the power of representation is limited to the head office.

DX 281 Ing Wolfgang Prohazka, born 19 July 1958 represents the company jointly with an executive or with another authorised signatory since 10 July 2015

EK 227 Ing. Bernhard Kowatsch, born 24 March 1968 represents the company jointly with an executive or with another authorised signatory since 3 July 2013, whereby the power of representation is limited to branch office 010.

EP 62 Gerhard Wertl, born 21 August 1954 represents the company jointly with an executive or with another authorised signatory since 5 September 2000, whereby the power of representation is limited to branch office 010.

EQ 62 Stefan Altziebler, born 23 July 1957 represents the company jointly with an executive or with another authorised signatory since 5 September 2000, whereby the power of representation is limited to branch office 007.

FQ 137 Dipl-Ing Manfred Lechner, born 16 July 1963 represents the company jointly with an executive or with another authorised signatory since 1 May 2005.

FT 62 Ing Wolfgang Dvorak, born 4 May 1958 represents the company jointly with an executive or with another authorised signatory since 5 September 2000, whereby the power of representation is limited to branch office 009.

GA 127 Dipl-Ing Mario Rabitsch, born 3 March 1961 represents the company jointly with an executive or with another authorised signatory since 1 August 2004, whereby the power of representation is limited to the head office.

GG 116 Herbert Vanzo, born 16 June 1957 represents the company jointly with an executive or with another authorised signatory since 30 September 2003.

GV 155 Dipl Ing Johannes Kals, born 26 May 1961 represents the company jointly with an executive or with another authorised signatory since 10 January 2007.

GX 92 Werner Kribernegg, born 19 April 1958 represents the company jointly with an executive or with another authorised signatory since 25 April 2002.

GZ 135 DI Harald Kratochwil, born 12 December 1959 represents the company jointly with an executive or with another authorised signatory since 1 March 2005.

HI 112 Walter Rützler, born 18 April 1958 represents the company jointly with an executive or with another authorised signatory since 25 July 2003

HJ 112 Heinz Sumper, born 5 January 1961 represents the company jointly with an executive or with another authorised signatory since 25 July 2003

HL 112 Dipl-Ing Frank Fercher, born 29 April 1963 represents the company jointly with an executive or with another authorised signatory since 25 July 2003, whereby the power of representation is limited to branch office 009.

HM 112 Walter Schmidt, born 20 January 1959 represents the company jointly with an executive or with another authorised signatory since 25 July 2003, whereby the power of representation is limited to branch office 009.

HO 157 Ing. Manfred Trnka, born 13 February 1962 represents the company jointly with an executive or with another authorised signatory since 1 April 2007.

HT 135 Mag Gerald Zangl, born 17 December 1967 represents the company jointly with an executive or with

Mag. phil. Ingrid Neff
Allgem. beeideter und gerichtlich zertifizierter Dolmetsch für Englisch

STRABAG
STRABAG AG
22.08.2017

another authorised signatory since 1 March 2005.

HV Felix Koselleck, born 24 June 1963
149 represents the company jointly with an executive or with another authorised signatory since 1 June 2006.

HW Mag Günther Metzler, born 18 November 1966
118 represents the company jointly with an executive or with another authorised signatory since 8 November 2003.

HX Johann König, born 12 December 1964
118 represents the company jointly with an executive or with another authorised signatory since 8 November 2003.

HY Franz Redl, born 6 September 1964
118 represents the company jointly with an executive or with another authorised signatory since 8 November 2003, whereby the power of representation is limited to the head office and branch office 007.

IB Dipl Ing Gerhard Streimel, born 23 July 1962
157 represents the company jointly with an executive or with another authorised signatory since 1 April 2007.

IC Dipl Ing Martin Ullrich, born 9 February 1967
121 represents the company jointly with an executive or with another authorised signatory since 26 January 2004, whereby the power of representation is limited to the head office.

ID Dipl Ing Dr Georg Kroyer, born 28 September 1967
272 represents the company jointly with an executive or with another authorised signatory since 1 March 2017, whereby the power of representation is limited to branch office 006 and 007.

IG Dipl Ing Thomas Wancata, born 19 July 1964
123 represents the company jointly with an executive or with another authorised signatory since 1 March 2004.

II Ing Günther Vojacek, born 14 July 1955
123 represents the company jointly with an executive or with another authorised signatory since 1 March 2004, whereby the power of representation is limited to branch office 007.

IL Mag Franz Burgstaller, born 14 May 1966
219 represents the company jointly with an executive or with another authorised signatory since 1 January 2013

IU Ing Heimo Oberwinkler, born 10 May 1963
133 represents the company jointly with an executive or with another authorised signatory since 1 January 2005.

JA Ing Mag Ingo Sattlegger, born 4 August 1966
135 represents the company jointly with an executive or with another authorised signatory since 1 March 2005.

JC Dipl Ing Wolfgang Dittrich, born 25 September 1967
237 represents the company jointly with an executive or with another authorised signatory since 1 April 2014.

JD Maximilian Waltl, born 3 June 1959
137 represents the company jointly with an executive or with another authorised signatory since 1 May 2005.

JG Ing Roland Pomarolli, born 16 June 1965
137 represents the company jointly with an executive or with another authorised signatory since 1 May 2005, whereby the power of representation is limited to branch office 002.

JH Ing Bernhard Prantl, born 16 April 1964
137 represents the company jointly with an executive or with another authorised signatory since 1 May 2005, whereby the power of representation is limited to branch office 002.

JJ Klaus Stefan Unger, born 4 September 1961
142 represents the company jointly with an executive or with another authorised signatory since 1 September 2005, whereby the power of representation is limited to the head office.

JK Ing. Wolfgang Lehner, born 2 October 1962

C96

Mag. phil. Ingrid Neff
Allgem. beeidigter und gerichtlich zertifizierter Dolmetsch für Englisch

STRABAG
STRABAG AG

157 represents the company jointly with an executive or with another authorised signatory since 1 April 2007.

JN Mag Ing Stephan Jainöcker, born 29 September 1965
146 represents the company jointly with an executive or with another authorised signatory since 1 April 2006.

JQ Gustav Schelberger, born 16 October 1956
146 represents the company jointly with an executive or with another authorised signatory since 1 April 2006, whereby the power of representation is limited to the head office.

JT Ing Gerold Alfred Pirker, born 15 November 1969
146 represents the company jointly with an executive or with another authorised signatory since 1 April 2006, whereby the power of representation is limited to branch offices 003 and 008.

JX Dipl Ing Michael Markart, born 24 July 1958
147 represents the company jointly with an executive or with another authorised signatory since 1 May 2006.

JY Erwin Wurzer, born 18 May 1953
147 represents the company jointly with an executive or with another authorised signatory since 1 May 2006.

JZ Dr James Lee Weiss, born 10 January 1968
157 represents the company jointly with an executive or with another authorised signatory since 1 April 2007.

KB Dipl Ing Norbert Komma, born 22 June 1959
147 represents the company jointly with an executive or with another authorised signatory since 1 May 2006, whereby the power of representation is limited to the head office.

KD DiplIng DiplIng Axel Otto Thomaschütz, born 5 August 1975
147 represents the company jointly with an executive or with another authorised signatory since 1 May 2006, whereby the power of representation is limited to the head office.

KE Christian Matzner, born 4 April 1965
147 represents the company jointly with an executive or with another authorised signatory since 1 May 2006, whereby the power of representation is limited to branch office 009.

KF Ing Walter Burger, born 14 June 1967
147 represents the company jointly with an executive or with another authorised signatory since 1 May 2006, whereby the power of representation is limited to branch office 009.

KI DWT Dipl Ing MBA Günter Moser, born 31 October 1967
199 represents the company jointly with an executive or with another authorised signatory since 24 May 2011.

KN Mag Heribert Herzog, born 15 September 1964
155 represents the company jointly with an executive or with another authorised signatory since 10 January 2007.

KO Christian Hauser, born 2 October 1962
155 represents the company jointly with an executive or with another authorised signatory since 10 January 2007.

KP Josef Rester, born 7 June 1960
155 represents the company jointly with an executive or with another authorised signatory since 10 January 2007

KQ Ing Stefan Hanser, born 6 November 1966
251 represents the company jointly with an executive or with another authorised signatory since 10 July 2015.

KU Ing Gerald Stadler, born 18 February 1965
156 represents the company jointly with an executive or with another authorised signatory since 1 February 2007, whereby the power of representation is limited to branch offices 003 and 008.

KV Ing Helmut Atzlinger, born 18 August 1964
156 represents the company jointly with an executive or with another authorised signatory since 1 February 2007,

15

Mag. phil. Ingrid Neff
Allgem. beeideter und gerichtlich zertifizierter Dolmetsch für Englisch

D.O.O. VODOVOD I KANALIZACIJA DANILOVGRAD

whereby the power of representation is limited to branch offices 003 and 008.

KW 156 Ing Heinz Peter Fuchs, born 16 April 1965
represents the company jointly with an executive or with another authorised signatory since 1 February 2007, whereby the power of representation is limited to branch offices 003 and 008.

LA 157 Geral Urban, born 22 February 1970
represents the company jointly with an executive or with another authorised signatory since 15 March 2007, whereby the power of representation is limited to branch office 009.

LB 157 Raimund Desalla, born 3 January 1962
represents the company jointly with an executive or with another authorised signatory since 10 May 2007.

LC 279 Ing Martin Kaftan, born 13 September 1970
represents the company jointly with an executive or with another authorised signatory since 1 July 2017

LL 162 Dipl Ing Thomas Höfner, born 2 January 1971
represents the company jointly with an executive or with another authorised signatory since 28 August 2007, whereby the power of representation is limited to the head office.

LN 162 Mag Klaus-Dieter Pertl, born 25 April 1971
represents the company jointly with an executive or with another authorised signatory since 28 August 2007, whereby the power of representation is limited to the head office.

LR 164 Ing. Klaus Heller, born 21 September 1966
represents the company jointly with an executive or with another authorised signatory since 1 January 2008, whereby the power of representation is limited to branch offices 003 and 007.

LT 164 Walter Schwab, born 3 July 1961
represents the company jointly with an executive or with another authorised signatory since 1 January 2008.

LY 166 Alois Neuherz, born 17 August 1963
represents the company jointly with an executive or with another authorised signatory since 1 March 2008, whereby the power of representation is limited to the head office.

MB 166 Ing Kurt Schandl, born 14 June 1956
represents the company jointly with an executive or with another authorised signatory since 1 March 2008, whereby the power of representation is limited to branch office 002.

MC 168 Dr. Kilian Schwarzacher, born 15 March 1958
represents the company jointly with an executive or with another authorised signatory since 1 May 2008.

MH 175 Ing Walter Bäuml, born 13 February 1973
represents the company jointly with an executive or with another authorised signatory since 1 January 2009, whereby the power of representation is limited to branch office 009.

MN 176 Martina Hofmann, born 7 January 1966
represents the company jointly with an executive or with another authorised signatory since 1 March 2009.

MR 183 Ing Christoph Totschnig, born 8 March 1964
represents the company jointly with an executive or with another authorised signatory since 1 February 2010, whereby the power of representation is limited to branch office 002.

MT 267 Dipl Ing Gerhard Urschitz, born 26 May 1968
represents the company jointly with an executive or with another authorised signatory since 1 November 2016

MU 183 Klaus Kathmann, born 12 May 1964
represents the company jointly with an executive or with

Mag. phil. Ingrid Neff
Allgem. beeideter und gerichtlich zertifizierter Dolmetsch für Englisch

STRABAG
STRABAG 22.08.2017

another authorised signatory since 21January 2010, whereby the power of representation is limited to the head office.

NB 194 Ing Robert Denk, born 22 July 1971 represents the company jointly with an executive or with another authorised signatory since 1 January 2011, whereby the power of representation is limited to branch office 009.

NC 195 Gerhard Gruber, born 4 August 1957 represents the company jointly with an executive or with another authorised signatory since 1 January 2011, whereby the power of representation is limited to branch office 003.

ND 195 Ing Robert Krakhofer, born 5 June 1967 represents the company jointly with an executive or with another authorised signatory since 23 February 2011, whereby the power of representation is limited to the head office.

NE 195 Dipl Ing Peter Reichenspurner, born 17 January 1958 represents the company jointly with an executive or with another authorised signatory since 1 March 2011, whereby the power of representation is limited to the head office.

NH 200 Mag (FH) Markus Fischer, born 18 July 1976 represents the company jointly with an executive or with another authorised signatory since 1 July 2011.

NJ 200 Ing Fritz Peter Eder, born 7 February 1959 represents the company jointly with an executive or with another authorised signatory since 1 June 2011, whereby the power of representation is limited to the head office.

NK 201 Ing. Johann Pölzl, born 9 July 1970 represents the company jointly with an executive or with another authorised signatory since 1 July 2011

NL 201 Stefan Olsacher, born 9 March 1957 represents the company jointly with an executive or with another authorised signatory since 1 July 2011, whereby the power of representation is limited to the head office.

NO 206 DI (FH) Robert Pavlik, born 20 December 1969 represents the company jointly with an executive or with another authorised signatory since 19 September 2011, whereby the power of representation is limited to the head office.

NP 207 Ing Peter Goca, born 24 April 1968 represents the company jointly with an executive or with another authorised signatory since 21 October 2011, whereby the power of representation is limited to the head office.

NS 208 Dipl.-Ing. Hellfried Gugel, born 19 July 1966 represents the company jointly with an executive or with another authorised signatory since 1 January 2012, whereby the power of representation is limited to branch office 001.

NT 210 Dipl.-Ing. Dr. Herwig Schwarz, born 14 January 1973 represents the company jointly with an executive or with another authorised signatory since 15 February 2012, whereby the power of representation is limited to the head office.

NW 214 Dipl.-BW Marian Kloss, born 26 January 1957 represents the company jointly with an executive or with another authorised signatory since 13 September 2012

NZ 216 Ing. Ferdinand Mittermaier, born 3 December 1958 represents the company jointly with an executive or with another authorised signatory since 1 December 2012, whereby the power of representation is limited to branch office 001.

Mag. phil. Ingrid Neff
Allgem. beeideter und gerichtlich zertifizierter Dolmetsch für Englisch

C99

OA Albert Waltl, born 30 March 1969
217 represents the company jointly with an executive or with another authorised signatory since 1 January 2013

OB Edith Herz, born 25 December 1960
217 represents the company jointly with an executive or with another authorised signatory since 1 January 2013

OC Dipl.-Ing. FH Holger Specht, born 15 April 1958
218 represents the company jointly with an executive or with another authorised signatory since 1 January 2013, whereby the power of representation is limited to the head office.

OD Dipl.-Ing. (FH) Christian Sadleder, born 17 January 1977
220 represents the company jointly with an executive or with another authorised signatory since 1 April 2013, whereby the power of representation is limited to the head office.

OE Dipl.-Ing. Walter Neurathner, born 20 June 1973
220 represents the company jointly with an executive or with another authorised signatory since 1 April 2013, whereby the power of representation is limited to the head office.

OI Franz Aigner, born 28 March 1966
236 represents the company jointly with an executive or with another authorised signatory since 6 March 2014, whereby the power of representation is limited to branch office 006 and 007.

OK Dipl.-Ing. (FH) Dieter Wilken, born 22 February 1969
233 represents the company jointly with an executive or with another authorised signatory since 1 January 2014, whereby the power of representation is limited to the head office.

OM Dipl.-Ing. Dirk Grüneberg, born 23 December 1965
235 represents the company jointly with an executive or with another authorised signatory since 10 February 2014, whereby the power of representation is limited to the head office.

ON DDipl.-Ing. Simon Wild, born 17 August 1979
235 represents the company jointly with an executive or with another authorised signatory since 10 February 2014, whereby the power of representation is limited to the head office.

OO Manfred Schöppl, born 5 June 1969
251 represents the company jointly with an executive or with another authorised signatory since 10 July 2015.

OP Ing. Robert Kallinger, born 7 February 1968
236 represents the company jointly with an executive or with another authorised signatory since 6 March 2014, whereby the power of representation is limited to the branch office 006 and 007.

OQ Jens Hoffmann, born 15 July 1976
240 represents the company jointly with another executive or with an authorised signatory since 8 August 2014, whereby the power of representation is limited to the head office.

OR Jürgen Raschendorfer, born 27 July 1972
270 represents the company jointly with an executive or with another authorised signatory since 1 January 2017.

OS Franz Weissinger, born 20 June 1960
245 represents the company jointly with an executive or with another authorised signatory since 1 January 2015.

OT Mag. Samir Ljaic, born 29 July 1980
246 represents the company jointly with an executive or with another authorised signatory since 15 January 2015, whereby the power of representation is limited to the head office.

OV Dipl.-Ing. Erwin Fahrnberger, born 4 April 1973
246 represents the company jointly with an executive or with

Mag. Phil. Ingrid Neff
Allgem. beeideter und gerichtlich zertifizierter Dolmetsch für Englisch

https://www.verrechnungsstelle.at/fb/at.gv.justiz.fbw/ds/auszug/auszug

STRABAG
STRABAG 22.08.2017

another authorised signatory since 15 January 2015, whereby the power of representation is limited to the branch office 007.

OW Mag. Harald Unterweger, born 7 October 1977
246 represents the company jointly with an executive or with another authorised signatory since 1 January 2015, whereby the power of representation is limited to the branch office 009.

OX Dipl.-Ing. Bernd Schöllhammer, born 20 March 1971
251 represents the company jointly with an executive or with another authorised signatory since 10 July 2015.

OY Werner Neubauer, born 8 March 1967
247 represents the company jointly with an executive or with another authorised signatory since 1 January 2015, whereby the power of representation is limited to the head office.

OZ Christian Deckert, born 11 December 1970
248 represents the company jointly with an executive or with another authorised signatory since 23 March 2015, whereby the power of representation is limited to the head office.

PA Dipl.-Ing. Martin Sotek, born 18 May 1974
248 represents the company jointly with an executive or with another authorised signatory since 23 March 2015, whereby the power of representation is limited to the head office.

PC Robert Fritz, born 30 May 1966
252 represents the company jointly with an executive or with another authorised signatory since 7 September 2015, whereby the power of representation is limited to the head office.

PD Dr. Stefan Weiss, MBA, born 2 March 1973
254 represents the company jointly with an executive or with another authorised signatory since 15 September 2015, whereby the power of representation is limited to the head office.

PE Jörg Wellmeyer, born 1 July 1968
255 represents the company jointly with an executive or with another authorised signatory since 1 October 2015

PF Peter Heinz Tropper, born 26 February 1970
259 represents the company jointly with an executive or with another authorised signatory since 1 January 2016, whereby the power of representation is limited to the head office.

PG Günther Hartweger, born 23 May 1967
259 represents the company jointly with an executive or with another authorised signatory since 1 January 2016, whereby the power of representation is limited to the head office.

PH David Grottendieck, born 9 January 1971
259 represents the company jointly with an executive or with another authorised signatory since 15 February 2016

PI Mag. Alfred Altersberger, born 18 June 1962
259 represents the company jointly with an executive or with another authorised signatory since 15 February 2016

PJ Ing. Markus Pfeifer, born 27 April 1975
261 represents the company jointly with an executive or with another authorised signatory since 20 April 2016, whereby the power of representation is limited to the branch office 002.

PK Ing. Jörg Braun, born 9 October 1967
263 represents the company jointly with an executive or with another authorised signatory since 1 July 2016, whereby the power of representation is limited to the branch office 009.

PL Dipl.-Ing. (FH) Mario Hameseder, born 27 June 1979
263 represents the company jointly with an executive or with

Mag. phil. Ingrid Neff
Allgem. beeideter und gerichtlich zertifizierter Dolmetsch für Englisch

STRABAG
STRABAG 22.08.2017

another authorised signatory since 11 July 2016, whereby the power of representation is limited to the branch office 006 and 007.

PM Norbert Rossak, born 15 February 1958
268 represents the company jointly with an executive or with another authorised signatory since 15 December 2016, whereby the power of representation is limited to the head office.

PN Thomas Hohwieler, born 7 November 1965
269 represents the company jointly with an executive or with another authorised signatory since 15 December 2016

PO Günter Königsmaier, born 4 July 1959
270 represents the company jointly with an executive or with another authorised signatory since 1 January 2017, whereby the power of representation is limited to the branch office 003.

PP Oliver Schupe, born 29 October 1966
270 represents the company jointly with an executive or with another authorised signatory since 1 January 2017

PQ Dipl.-Ing. Hannes Gamsjäger, born 4 October 1969
270 represents the company jointly with an executive or with another authorised signatory since 1 February 2017, whereby the power of representation is limited to the head office.

PR Frederik Kind, born 21 April 1981
272 represents the company jointly with an executive or with another authorised signatory since 1 March 2017, whereby the power of representation is limited to the head office.

PS Peter OTTO, born 10 April 1968
273 represents the company jointly with an executive or with another authorised signatory since 1 March 2017, whereby the power of representation is limited to the branch office 006 and 007.

PT Rainer Bendekovits, born 22 September 1976
273 represents the company jointly with an executive or with another authorised signatory since 1 March 2017, whereby the power of representation is limited to the branch office 009.

PU Ing. Mag. Christian Messinger, born 17 September 1975
275 represents the company jointly with an executive or with another authorised signatory since 18 April 2017, whereby the power of representation is limited to the head office.

PV Dipl.-Ing. Reinhard Bodner, born 31 August 1978
275 represents the company jointly with an executive or with another authorised signatory since 18 April 2017, whereby the power of representation is limited to the head office.

PW Dipl.-Ing. (FH) Mario Theurl, born 10 August 1976
277 represents the company jointly with an executive or with another authorised signatory since 1 June 2017

PX Hannes Prassl, born 5 May 1982
277 represents the company jointly with an executive or with another authorised signatory since 1 June 2017, whereby the power of representation is limited to the branch office 001.

PY Werner Schwager, born 30 April 1980
277 represents the company jointly with an executive or with another authorised signatory since 1 July 2017, whereby the power of representation is limited to the branch office 010.

PZ Andreas Schrittesser, born 5 November 1970
277 represents the company jointly with an executive or with another authorised signatory since 1 July 2017, whereby the power of representation is limited to the branch office 003 and 008.

Mag. phil. Ingrid Neff
Allgem. beeideter und gerichtlich zertifizierter Dolmetsch für Englisch

QA Kurt Zwinger, born 30 June 1970
277 represents the company jointly with an executive or with another authorised signatory since 1 July 2017, whereby the power of representation is limited to the branch office 003 and 008.

QB Georg Kappel, born 22 January 1978
277 represents the company jointly with an executive or with another authorised signatory since 1 July 2017, whereby the power of representation is limited to the branch office 006 and 007.

QC Andreas Eder, born 21 June 1977
277 represents the company jointly with an executive or with another authorised signatory since 1 July 2017, whereby the power of representation is limited to the branch office 008.

QD Yvonne Otrob, born 17 March 1990
279 represents the company jointly with an executive or with another authorised signatory since 1 July 2017, whereby the power of representation is limited to the branch office 009.

QE Ing. Roman Hornischer, born 31 December 1977
279 represents the company jointly with an executive or with another authorised signatory since 1 July 2017

QF Dipl.-Ing. Roman Velikovsky, born 15 May 1965
281 represents the company jointly with an executive or with another authorised signatory since 1 July 2017, whereby the power of representation is limited to the head office.

SUPERVISORY BOARD MEMBER

BY Mag Hannes Truntschnig, born 22 July 1956
109 Member

IX Dipl Ing Siegfried Wanker, born 5 May 1968
194 Member

JE Mag. Christian Harder, born 19 August 1968
239 Deputy President

JI Dipl.-Ing.Dr.techn. Peter Krammer, born 18 January 1966
182 Member

NM Dr. Thomas Birtel, born 3 June 1954
239 President

--- BRANCH OFFICE 001 ---

1 formerly Provincial Court (Civil Law) Graz HRB 1478
Initial entry on 29 April 1930

COMPANY
60 STRABAG AG
Branch office Styria

LOCATION of BRANCH OFFICE 001 in
1 political municipality of Graz

BUSINESS ADDRESS
107 Maggstraße 40
8042 Graz

--- BRANCH OFFICE 002 ---

1 formerly Provincial Court Innsbruck HRB 6003
Initial entry on 27 September 1930

COMPANY
60 STRABAG AG
Branch office Tyrol/Vorarlberg

LOCATION of BRANCH OFFICE 002 in

Mag. phil. Ingrid Neff
Allgem. beeideter und gerichtlich zertifizierter Dolmetsch für Englisch

STRABAG
STRABAG AG

1 political municipality of Innsbruck

BUSINESS ADDRESS
143 Sterzinger Straße 1
6020 Innsbruck

--- BRANCH OFFICE 003 ---

1 formerly Provincial Court Linz HRB 3500
Initial entry on 10 October 1930

COMPANY
60 STRABAG AG
Branch office Upper Austria

LOCATION of BRANCH OFFICE 003 in
1 political municipality of Linz

BUSINESS ADDRESS
54 Salzburger Straße 323
4021 Linz

--- BRANCH OFFICE 006 ---

1 formerly Provincial Court Eisenstadt HRB 2874
Initial entry on 10 July 1967

COMPANY
60 STRABAG AG
Branch office Burgenland

LOCATION of BRANCH OFFICE 006 in
1 political municipality of Markt Sankt Martin

BUSINESS ADDRESS
265 Industriegelände 5
7341 Markt St. Martin

--- BRANCH OFFICE 007 ---

1 formerly Provincial Court St. Pölten HRB 664
Initial entry on 7 October 1976

COMPANY
60 STRABAG AG
Branch office Lower Austria

LOCATION of BRANCH OFFICE 007 in
1 political municipality of Sankt Pölten

BUSINESS ADDRESS
117 Ernst-Maerker-Straße 20
3100 St. Pölten

--- BRANCH OFFICE 008 ---

1 formerly Provincial Court Salzburg HRB 6593
Initial entry on 27 January 1971

COMPANY
60 STRABAG AG
Branch office Salzburg

LOCATION of BRANCH OFFICE 008 in
54 political municipality of Thalgau

BUSINESS ADDRESS

Mag. phil. Ingrid Neff
Allgem. beeideter und gerichtlich zertifizierter Dolmetsch für Englisch

STRABAG

151 Breitwies 32
5303 Thalgau

--- BRANCH OFFICE 009 ---

1 formerly Commercial Court Vienna HRB 17660
Initial entry on 14 May 1975

COMPANY
60 STRABAG AG
Branch office Vienna

LOCATION of BRANCH OFFICE 009 in
1 political municipality of Vienna

BUSINESS ADDRESS
113 Donau-City-Straße 9
1220 Vienna

--- BRANCH OFFICE 010 ---

1 formerly Provincial Court Klagenfurt HRB 901
Initial entry on 29 August 1986

COMPANY
60 STRABAG AG
Branch office Carinthia

LOCATION of BRANCH OFFICE 010 in
1 Klagenfurt, political municipality of Klagenfurt am Wörthersee

BUSINESS ADDRESS
60 Boltzmannstraße 8
9020 Klagenfurt

--- INDIVIDUALS ---

46 BS Mag. Gerold Laubreiter, born 30 November 1962
46 Koschatstr. 7/1/3
9020 Klagenfurt
54 BY Mag Hannes Truntschnig, born 22 July 1956
54 Ruthgasse 19
1190 Vienna
62 CC Gerhard Biswanger, born 12 August 1957
275 Carl Appel Straße 9/25/2
1100 Vienna
62 CP Ing Theodor Klais, born 9 April 1953
62 Johann Hoffmann-Platz 7/10
1120 Vienna
62 DC Ing Günther Rossbory, born 20 May 1953
62 Neubach 12
3382 Loosdorf
62 DI Franz Urban, born 20 January 1960
271 Grabengasse 24/Top 36
2500 Baden near Vienna
62 DL Mag Wolfgang Zechmeister, born 10 September 1962
62 Tolleterau 210
4710 St. Georgen bei Grieskirchen
62 DM Dipl-Ing Alfred Zeiler, born 28 August 1957
62 Eschengasse 1
4616 Weißkirchen an der Traun
62 DO Ing Manfred Aschaber, born 8 March 1958
62 Tinstingerstraße 61
4523 Neuzeug/Schwaming
62 DU Dipl-Ing Werner Kunz, born 20 November 1956
62 Hauptstraße 197
9210 Pörtschach am Wörther See

Mag. phil. Ingrid Neff
Allgem. beeideter und gerichtlich zertifizierter Dolmetsch für Englisch

STRABAG
STRABAG AG

62 DX Ing Wolfgang Prohazka, born 19 July 1958
62 Schuppengasse 37a
1230 Vienna
227 EK Ing. Bernhard Kowatsch, born 24 March 1968
227 Ebentaler Straße 54/31
9020 Klagenfurt am Wörthersee
62 EP Gerhard Wertl, born 21 August 1954
276 Banater Weg 4/7
9073 Klagenfurt-Viktring
62 EQ Stefan Altziebler, born 23 July 1957
62 Schönbühel 141
3392 Schönbühel an der Donau
62 FQ Dipl-Ing Manfred Lechner, born 16 July 1963
137 Länd 99
6233 Kramsach
62 FT Ing Wolfgang Dvorak, born 4 May 1958
62 Dr.-Max-Jung-Straße 56
2603 Matzendorf
62 GA Dipl-Ing Mario Rabitsch, born 3 March 1961
62 Josef-Schmutzergasse 12
3412 Kierling
62 GG Herbert Vanzo, born 16 June 1957
62 Lärchenweg 22
9871 Seeboden
155 GV Dipl Ing Johannes Kals, born 26 May 1961
90 Rittingerstraße 1
4820 Bad Ischl
92 GX Werner Kribernegg, born 19 April 1958
92 Feldweg 3
8430 Tillmitsch
95 GZ DI Harald Kratochwil, born 21 December 1959
95 Gauermanngasse 45
3003 Gablitz
104 HC Mag Ing Manfred Rosenauer, born 11 April 1957
104 Stefan-Fechter-Weg 3
4020 Linz
112 HI Walter Rützler, born 18 April 1958
112 Albrechtsberger Straße 25
3382 Loosdorf/ District Melk
112 HJ Heinz Sumper, born 5 January 1961
112 Fischering 14
9433 St. Andrä im Lavanttal
112 HL Dipl-Ing Frank Fercher, born 29 April 1963
112 Leon.Bernstein Straße 4-6/5
1220 Vienna
112 HM Walter Schmidt, born 20 January 1959
112 Heimgasse 3
7161 St. Andrä bei Frauenkirchen
112 HN Markus Engerth, born 1 June 1968
278 Birkengasse 13
2123 Unterolberndorf
112 HO Ing Manfred Trnka, born 13 February 1962
112 Doblhoffgasse 1 B
2512 Tribuswinkel
112 HP Ing Reinhard Kerschner, born 6 March 1966
112 Gassen 41
3243 St. Leonhard am Forst
112 HR Marina Humitsch, born 28 August 1958
273 Karolinengasse 22/5
1040 Vienna
116 HT Mag Gerald Zangl, born 17 December 1967
116 L.-Bernstein-Straße 4-6
1220 Vienna
116 HU Mag Herbert Krutina, born 14 July 1960
116 Auf der Hundskehle 8
2384 Breitenfurt bei Wien
116 HV Felix Koselleck, born 24 June 1963

Mag. phil. Ingrid Neff
Allgem. beeideter und gerichtlich zertifizierter Dolmetsch für Englisch

STRABAG
STRABAG AG
22.08.2017

146 JQ
146

146
14

116 Ostendstraße 47
D-60314 Frankfurt
118 HW Mag Günther Metzler, born 18 November 1966
118 Kaltenbrunngasse 11B
8043 Graz-Kroisbach
118 HX Johann König, born 12 December 1964
126 Schiedermayrweg 11
4020 Linz
118 HY Franz Redl, born 6 September 1964
118 Mozartgasse 22
3003 Gablitz
121 IB Dipl Ing Gerhard Streimel, born 23 July 1962
121 Am Saatzen 15
2721 Bad Fischau
121 IC Dipl Ing Martin Ullrich, born 9 February 1967
121 Wranitzkygasse 2/House 22
1220 Vienna
121 ID Dipl Ing Dr Georg Kroyer, born 28 September 1967
121 Taglieberstraße 59
1238 Vienna
123 IG Dipl Ing Thomas Wancata, born 19 July 1964
123 Peuckerstraße 36
1220 Vienna
123 II Ing Günther Vojacek, born 14 July 1955
123 Laaben 197
3053 Brand-Laaben
123 IL Mag Franz Burgstaller, born 14 May 1966
180 Mitterberggasse 19/9
1180 Vienna
133 IS Dipl Ing Dragan Pavelic, born 17 March 1956
133 Sinagasse 56/2/3
1223 Vienna
133 IU Ing Heimo Oberwinkler, born 10 May 1963
133 Gartenstraße 2
9800 Spittal an der Drau
134 IX Dipl Ing Siegfried Wanker, born 5 May 1968
134 Aslangasse 2/5/6
1190 Vienna
135 JA Ing Mag Ingo Sattlegger, born 4 August 1966
135 Gustav-Pick-Gasse 17/3
1190 Vienna
136 JC Dipl Ing Wolfgang Dittrich, born 25 September 1967
136 Bergblickgasse 17
2102 Bisamberg
137 JD Maximilian Waltl, born 3 June 1959
137 Am Langen Zaun 53E
4030 Linz
137 JE Mag Christian Harder, born 19 August 1968
226 Ortenburgerstraße 27
9800 Spittal an der Drau
137 JG Ing Roland Pomarolli, born 16 June 1965
137 Klosteranger 4C
6020 Innsbruck
137 JH Ing Bernhard Prantl, born 16 April 1964
137 Brennwald 333
6473 Wenns
141 JI Dipl.-Ing. Dr.techn. Peter Krammer, born 18 January 1966
276 Langwiesgasse 24
1140 Vienna
142 JJ Klaus Stefan Unger, born 4 September 1961
142 Fasangasse 473
2013 Göllersdorf
144 JK Ing. Wolfgang Lehner, born 2 October 1962
197 Bernsteinstraße 15
4222 Luftenberg an der Donau
146 JN Mag Ing Stephan Jainöcker, born 29 September 1965
146 Salitergasse 74-80

Mag. phil. Ingrid Neff
Allgem. beeideter und gerichtlich zertifizierter Dolmetsch für Englisch

STRABAG
STRABAG AG 22.08.2017

2380 Perchtoldsdorf
146 JQ Gustav Schelberger, born 16 October 1956
146 Wachaustraße 57
3121 Karlstetten
146 JT Ing Gerold Alfred Pirker, born 15 November 1969
146 Reitberg 206b
5301 Eugendorf
147 JX Dipl Ing Michael Markart, born 24 July 1958
147 Fesslerstraße 36
3100 St. Pölten
147 JY Erwin Wurzer, born 18 May 1953
147 Viktoriaweg 42b
9020 Klagenfurt
148 JZ Dr James Lee Weiss, born 10 January 1968
147 Eckpergasse 5/1
1180 Vienna
147 KB Dipl Ing Norbert Komma, born 22 June 1959
147 Hauptstraße 71
2452 Mannersdorf am Leithagebirge
147 KD DiplIng DiplIng Axel Otto Thomaschütz, born 5 August 1975
147 Ponauer Straße 10
9800 Spittal an der Drau
147 KE Christian Matzner, born 4 April 1965
147 Haselbrunnerstraße 12/15
1230 Vienna
147 KF Ing Walter Burger, born 14 June 1967
147 Kremserstraße 54
3470 Kirchberg am Wagram
147 KI DWT Dipl Ing MBA Günter Moser, born 31 October 1967
199 Gersthoferstraße 124
1180 Vienna
155 KN Mag Heribert Herzog, born 15 September 1964
155 Liesersiedlung 69
9800 Spittal an der Drau
155 KO Christian Hauser, born 2 October 1962
168 Mühlenweg 22
5303 Thalgau-Egg
155 KP Josef Rester, born 7 June 1960
155 Linzer Straße 40/4
3002 Purkersdorf
155 KQ Ing Stefan Hanser, born 6 November 1966
155 Am Moosbach 6c
5310 Mondsee
156 KT Gerald Kienast, born 24 September 1965
156 Losensteingasse 14
3382 Loosdorf / Dist. Melk
156 KU Ing Gerald Stadler, born 18 February 1965
156 Felberstraße 31
5730 Mittersill
156 KV Ing Helmut Atzlinger, born 18 August 1964
156 Albinaweg 14
5411 Oberalm
181 KW Ing Heinz Peter Fuchs, born 6 April 1965
156 Salaberg 53
3350 Haag (Lower Austria)
157 LA Gerald Urban, born 22 February 1970
157 Donaustraße 109/10
2344 Maria Enzersdorf
157 LB Raimund Desalla, born 3 January 1962
157 Fürth 207
5721 Piesendorf
157 LC Ing Martin Kaftan, born 13 September 1970
157 Holzgasse 164
3400 Klosterneuburg
159 LJ Alexander Ortenberg, born 28 April 1966
260 Ostrovitjanova Str. 53, Apt. 240
RUS-117342 Moscow

Mag. phil. Ingrid Neff
Allgem. beeideter und gerichtlich zertifizierter Dolmetsch für Englisch

STRABAG
STRABAG 22.08.2017

207 NP
207

208
208

162 LL Dipl Ing Thomas Höfner, born 2 January 1971
187 Bachgasse 14
2122 Münichsthal
162 LN Mag Klaus-Dieter Pertl, born 25 April 1971
162 Erdmannsiedlung 11
9545 Radenthein
164 LR Ing. Klaus Heller, born 21 September 1966
164 Buchenweg 10
4111 Walding
164 LT Walter Schwab, born 3 July 1961
164 Munten 40
5205 Schleedorf
166 LY Alois Neuherz, born 17 August 1963
166 Wilfersdorf 98
8200 Gleisdorf
167 MB Ing Kurt Schandl, born 14 June 1956
166 Innstraße 15
6111 Volders
168 MC Dr Kilian Schwarzacher, born 15 March 1958
168 Donau-City-Straße 9
1220 Vienna
175 MH Ing Walter Bäuml, born 13 February 1973
175 Holzschlag 7
2565 Holzschlag
176 MN Martina Hofmann, born 7 January 1966
176 Anton-Hofmann-Gasse 2
2511 Pfaffstätten / Distr. Baden
183 MR Ing Christoph Totschnig, born 8 March 1964
183 Goasserweg 11
6170 Zirl
185 MT Dipl Ing Gerhard Urschitz, born 26 May 1968
183 c/o STRABAG AG
Donau-City-Straße 9
1220 Vienna
183 MU Klaus Kathmann, born 12 May 1964
183 c/o STRABAG AG
Donau-City-Straße 9
1220 Vienna
194 NB Ing Robert Denk, born 22 July 1971
194 Raphael-Donner-Allee 16
1220 Vienna
195 NC Gerhard Gruber, born 4 August 1957
195 Gutenhofnerstraße 6
4300 St. Valentin/ Lower Austria
195 ND Ing Robert Krakhofer, born 5 June 1967
195 Marienheimgasse 8/2/6
2460 Bruck an der Leitha
195 NE Dipl Ing Peter Reichenspurner, born 17 January 1958
195 Mozartstraße 16
DEU-84453 Mühldorf
198 NH Mag (FH) Markus Fischer, born 18 July 1976
198 Sensengasse 3/3/27
1090 Vienna
200 NJ Ing Fritz Peter Eder, born 7 February 1959
200 Brunnengasse 24e
2551 Enzesfeld-Lindabrunn
201 NK Ing. Johann Pölzl, born 9 July 1970
201 Teigitschstraße 24
8570 Voitsberg
201 NL Stefan Olsacher, born 9 March 1957
201 Kaning, Dorfstraße 11
9545 Radenthein
203 NM Dr. Thomas Birtel, born 3 June 1954
229 Boverstraße 127
DEU-45473 Mülheim an der Ruhr
230 NO DI (FH) Robert Pavlik, born 20 December 1969
206 Teichhof 54

Mag. phil. Ingrid Neff
Allgem. beeideter und gerichtlich zertifizierter Dolmetsch für Englisch

STRABAG
STRABAG AG

8044 Graz-Mariatrost
207 NP Ing Peter Goca, born 24 April 1968
207 Polgarstraße 30
1220 Vienna
208 NS Dipl.-Ing. Hellfried Gugel, born 19 July 1966
208 Pfeilerhofstraße 30a
8071 Hausmannstätten
210 NT Dipl.-Ing. Dr. Herwig Schwarz, born 14 January 1973
210 Im Werd 3/5
1020 Vienna
214 NW Dipl.-BW Marian Kloss, born 26 January 1957
214 Peter-Wolff-Straße 23
DEU-50259 Pulheim
216 NZ Ing. Ferdinand Mittermaier, born 3 December 1958
216 Unterwald 62a
8563 Ligist
217 OA Albert Waltl, born 30 March 1969
217 Lammersdorf 76
9872 Millstatt (Carinthia)
217 OB Edith Herz, born 25 December 1960
217 Columbusgasse 106/2/6
1100 Vienna
218 OC Dipl.-Ing. FH Holger Specht, born 15 April 1958
218 Dr.-Otto-Bößner-Weg 6
DEU-85521 Ottobrunn
220 OD Dipl.-Ing. (FH) Christian Sadleder, born 17 January 1977
220 Blindenmarkt 42
4600 Wels
220 OE Dipl.-Ing. Walter Neurathner, born 20 June 1973
220 Ungargasse 52/2/19
1030 Vienna
224 OH Dipl.-Ing. (FH) Edgar Schömig, born 1 October 1956
224 Hessenlauweg 14
DEU-70569 Stuttgart
229 OI Franz Aigner, born 28 March 1966
229 Mauternbach 71
3512 Mautern (Lower Austria)
233 OJ Karsten Richter, born 18 November 1959
233 Wallgarten 3
DEU-38518 Gifhorn
233 OK Dipl.-Ing. (FH) Dieter Wilken, born 22 February 1969
233 Höfergass 7a/Top 7
1090 Vienna
235 OM Dipl.-Ing. Dirk Grüneberg, born 23 December 1965
235 Obergasse 30
DEU-63225 Langen
235 ON DDipl.-Ing. Simon Wild, born 17 August 1979
235 Erdbergstraße 34 House 1
1030 Vienna
236 OO Manfred Schöppl, born 5 June 1969
236 Karling 146
4081 Hartkirchen (Upper Austria)
236 OP Ing. Robert Kallinger, born 7 February 1968
236 Plätzgasse 25
2700 Wiener Neustadt
240 OQ Jens Hoffmann, born 15 July 1976
240 Leopoldsgasse 9/Top 5
1020 Vienna
245 OR Jürgen Raschendorfer, born 27 July 1972
245 Jägerhofstraße 11
DEU-42119 Wuppertal
245 OS Franz Weissinger, born 20 June 1960
245 Hamerlinggasse 13a
3382 Loosdorf/ Distr. Melk
246 OT Mag. Samir Ljaic, born 29 July 1980
246 Arbeitergasse 17/1
2232 Deutsch Wagram

Mag. phil. Ingrid Neff
Allgem. beeideter und gerichtlich zertifizierter Dolmetsch für Englisch

STRABAG
STRABAG AG 22.08.2017

246 OV Dipl.-Ing. Erwin Fahrnberger, born 4 April 1973
246 Gossam 65
3644 Emmersdorf on Danube
246 OW Mag. Harald Unterweger, born 7 October 1977
246 Achauerstraße 8/2/33
2333 Leopoldsdorf near Vienna
247 OX Dipl.-Ing. Bernd Schöllhammer, born 20 March 1971
247 Wintergasse 48/9
3002 Purkersdorf
247 OY Werner Neubauer, born 8 March 1967
247 Eicherberg 61
8234 Eichberg
248 OZ Christian Deckert, born 11 December 1970
248 Jahrholzweg 12
DEU-82284 Grafrath
248 PA Dipl.-Ing. Martin Sotek, born 18 May 1974
248 Urselbrunnengasse 15/12
1100 Vienna
252 PC Robert Fritz, born 30 May 1966
252 Am Rosenhügel 77
2401 Fischamend
254 PD Dr. Stefan Weiss, MBA, born 2 March 1973
254 Flamminggasse 51
2500 Baden near Vienna
255 PE Jörg Wellmeyer, born 1 July 1968
255 Birnbaumweg 5
DEU-65556 Limburg-Staffel
259 PF Peter Heinz Tropper, born 26 February 1970
260 Felixgasse 57
1130 Vienna
259 PG Günther Hartweger, born 23 May 1967
259 Hangstraße 23a
9800 Spittal an der Drau
259 PH David Grottendieck, born 9 January 1971
259 Wiesenweg 8
DEU-83313 Siegsdorf
259 PI Mag. Alfred Altersberger, born 18 June 1962
259 Lammersdorf 69
9872 Millstatt (Carinthia)
261 PJ Ing. Markus Pfeifer, born 27 April 1975
261 Rettlsteinerweg 23
6112 Wattens
263 PK Ing. Jörg Braun, born 9 October 1967
263 Mauthausener Straße 20 F12
4221 Steyregg
263 PL Dipl.-Ing. (FH) Mario Hameseder, born 27 June 1979
263 Otto-Glöckel-Straße 4/2
3382 Loosdorf
268 PM Norbert Rossak, born 15 February 1958
268 Kneippstraße 3
4600 Wels
269 PN Thomas Hohwieler, born 7 November 1965
269 Rötebuckweg 49
DEU-79104 Freiburg
270 PO Günter Königsmaier, born 4 July 1959
270 Corneliusgasse 10
4020 Linz
270 PP Oliver Schupe, born 29 October 1966
270 Stocksiepen 2B
DEU-45133 Essen
270 PQ Dipl.-Ing. Hannes Gamsjäger, born 4 October 1969
270 Gosau 153/2
4824 Gosau
272 PR Frederik Kind, born 21 April 1981
272 Silbergasse 22/8
1190 Vienna
273 PS Peter OTTO, born 10 April 1968

Mag. phil. Ingrid Neff
Allgem. beeideter und gerichtlich zertifizierter Dolmetsch für Englisch

STRABAG
STRABAG AG
22.08.2017

273 Holzmarkt 26
2560 Berndorf (Lower Austria)
273 PT Rainer Bendekovits, born 22 September 1976
273 Günseck
7435 Günseck
275 PU Ing. Mag. Christian Messinger, born 17 September 1975
275 Brennleitenstraße 43-49/5
2202 Hagenbrunn
275 PV Dipl.-Ing. Reinhard Bodner, born 31 August 1978
275 Schlossbergstraße 19a
2114 Großrußbach
277 PW Dipl.-Ing. (FH) Mario Theurl, born 10 August 1976
277 Penzendorf 12
9911 Assling
277 PX Hannes Prassl, born 5 May 1982
277 Erzherzog Johann-Weg 3
8642 St. Lorenzen im Mürztal
277 PY Werner Schwager, born 30 April 1980
277 Trattengasse 7/2/14
9500 Villach
277 PZ Andreas Schrittesser, born 5 November 1970
277 Wienerstraße 2
5202 Neumarkt am Wallersee
277 QA Kurt Zwinger, born 30 June 1970
277 Sandtal 30
5144 Handenberg
277 QB Georg Kappel, born 22 January 1978
277 Redlschlag 143
7434 Bernstein (Bgld.)
277 QC Andreas Eder, born 21 June 1977
277 Dorfstraße 49
5733 Bramberg
279 QD Yvonne Otrob, born 17 March 1990
279 Siegfriedgasse 28/13/8
1210 Vienna
279 QE Ing. Roman Hornischer, born 31 December 1977
279 Wienerstraße 1/RH9
2483 Münchendorf
281 QF Dipl.-Ing. Roman Velikovsky, born 15 May 1965
281 Röntgengasse 63
1170 Vienna

---------- REPORT OF COMPLIANCE ----------

Commercial Court Vienna

1 Initial registration completed on 18.11.1993 Transaction 920 Fr 779/93 b
initial entry pursuant to Art. XXIII par. 4 *FBG* (Company Register Act)
39 entry on 1 July 1999 Transaction 72 Fr 7400/99 g
application for amendment received on 21 June 1999
43 entry on 2 September 1999 Transaction 72 Fr 8914/99 h
application for amendment received on 20 July 1999
46 entry on 21 September 1999 Transaction 72 Fr 11458/99 z
application for amendment received on 9 September 1999

Provincial Court Klagenfurt

54 entry on 10 August 2000 Transaction 5 Fr 4528/00 s
application for amendment received on 31 July 2000

Provincial Court Linz

56 entry on 23 August 2000 Transaction 34 Fr 2924/00 y
application for amendment received on 17 August 2000

Provincial Court Klagenfurt

Mag. phil. Ingrid Neff * Allgem. beeideter und gerichtlich zertifizierter Dolmetsch für Englisch *

STRABAG
STRABAG AG 22.08.2017

57	entry on 26 August 2000 Change in competency pursuant to § 120 (7) JN	Transaction	5 Fr	5102/00
58	entry on 1 September 2000 application for amendment received on 25 August 2000	Transaction	5 Fr	5103/00 k
59	entry on 2 September 2000 application for amendment received on 25 August 2000	Transaction	5 Fr	5105/00 p
60	entry on 5 September 2000 application for amendment received on 25 August 2000	Transaction	5 Fr	5106/00 s
62	entry on 21 September 2000 application for amendment received on 12 September 2000	Transaction	5 Fr	5552/00 x
64	entry on 26 September 2000 application for amendment received on 21 September 2000	Transaction	5 Fr	5791/00 y
65	entry on 13 October 2000 correction ex officio	Transaction	5 Fr	6487/00 x
66	entry on 17 October 2000 application for amendment received on 21 September 2000	Transaction	5 Fr	5805/00 v
67	entry on 17 October 2000 application for amendment received on 21 September 2000	Transaction	5 Fr	6877/00 w
68	entry on 18 October 2000 application for amendment received on 21 September 2000	Transaction	5 Fr	5913/00 b
69	entry on 19 October 2000 application for amendment received on 21 September 2000	Transaction	5 Fr	5921/00 p
70	entry on 20 October 2000 application for amendment received on 21 September 2000	Transaction	5 Fr	6061/00 w
71	entry on 21 October 2000 application for amendment received on 21 September 2000	Transaction	5 Fr	6494/00 g
72	entry on 24 October 2000 application for amendment received on 26 September 2000	Transaction	5 Fr	6876/00 v
76	entry on 4 April 2001 amendment/entry of data	Transaction	5 Fr	2366/01 w
78	entry on 25 July 2001 submitted financial statement received on 19 July 2001	Transaction	5 Fr	5307/01 w
79	entry on 21 August 2001 application for amendment received on 19 July 2001	Transaction	5 Fr	5310/01 z
81	entry on 13 October 2001 application for amendment received on 27 September 2001	Transaction	5 Fr	7646/01 i
82	entry on 16 October 2001 application for amendment received on 27 September 2001	Transaction	5 Fr	7651/01 t
83	entry on 18 October 2001 application for amendment received on 27 September 2001	Transaction	5 Fr	8124/01 m
85	entry on 14 November 2001 application for amendment received on 5 November 2001	Transaction	5 Fr	8671/01 t
90	entry on 28 March 2002 application for amendment received on 25 March 2002	Transaction	5 Fr	1991/02 b
92	entry on 25 April 2002 application for amendment received on 23 April 2002	Transaction	5 Fr	2616/02 x
95	entry on 4 July 2002 application for amendment received on 2 July 2002	Transaction	5 Fr	4433/02 v
104	entry on 28 January 2003 application for amendment received on 23 January 2003	Transaction	5 Fr	543/03 g
107	entry on 5 March 2003 application for amendment received on 28 February 2003	Transaction	5 Fr	1468/03 t
109	entry on 13 May 2003 application for amendment received on 8 May 2003	Transaction	5 Fr	3693/03 p
112	entry on 25 July 2003 application for amendment received on 22 July 2003	Transaction	5 Fr	5739/03 y
113	entry on 7 August 2003 application for amendment received on 5 August 2003	Transaction	5 Fr	6075/03 t
116	entry on 30 September 2003 application for amendment received on 25 September 2003	Transaction	5 Fr	7412/03 h
117	entry on 29 October 2003 application for amendment received on 27 October 2003	Transaction	5 Fr	8545/03 z
118	entry on 6 December 2003 application for amendment received on 4 December 2003	Transaction	5 Fr	9765/03 v

Mag. phil. Ingrid Neff
Allgem. beeidigte und gerichtlich zertifizierte Dolmetscherin für Englisch
STRABAG
STRABAG 22.08.2017

121 entry on 4 February 2004 application for amendment received on 2 February 2004	Transaction	5 Fr	665/03 w
123 entry on 2 April 2004 application for amendment received on 31 March 2004	Transaction	5 Fr	2700/04 m
126 entry on 10 August 2004 application for amendment received on 6 August 2004	Transaction	5 Fr	6486/04 f
127 entry on 26 August 2004 application for amendment received on 6 August 2004	Transaction	5 Fr	6828/04 h
132 entry on 13 January 2005 application for amendment received on 24 December 2004	Transaction	5 Fr	10445/04 b
133 entry on 5 February 2005 application for amendment received on 3 February 2005	Transaction	5 Fr	891/05 k
134 entry on 23 February 2005 application for amendment received on 21 February 2005	Transaction	5 Fr	1520/05 k
135 entry on 19 March 2005 application for amendment received on 17 March 2005	Transaction	5 Fr	2879/05 i
136 entry on 12 April 2005 application for amendment received on 8 April 2005	Transaction	5 Fr	3774/05 a
137 entry on 31 May 2005 application for amendment received on 25 May 2005	Transaction	5 Fr	5291/05 g
138 entry on 16 July 2005 annual financial statement received on 13 July 2005	Transaction	5 Fr	6581/05 d
141 entry on 28 July 2005 correction ex officio	Transaction	5 Fr	6867/05 z
142 entry on 7 September 2005 application for amendment received on 2 September 2005	Transaction	5 Fr	7786/05 a
143 entry on 1 November 2005 application for amendment received on 27 October 2005	Transaction	5 Fr	9549/05 v
144 entry on 1 February 2006 application for amendment received on 30 January 2006	Transaction	5 Fr	645/06 h
146 entry on 28 April 2006 application for amendment received on 24 April 2006	Transaction	5 Fr	4313/06 b
147 entry on 1 July 2006 application for amendment received on 16 June 2006	Transaction	5 Fr	5780/06 i
148 entry on 5 July 2006 correction ex officio	Transaction	5 Fr	6230/06 x
149 entry on 21 July 2006 application for amendment received 19 July 2006	Transaction	5 Fr	6721/06 v
151 entry on 25 July 2006 correction ex officio	Transaction	5 Fr	6868/06 i
154 entry on 16 January 2007 application for amendment received 27 December 2006	Transaction	5 Fr	11705/06y
155 entry on 15 February 2007 application for amendment received on 5 February 2007	Transaction	5 Fr	1122/07 v
156 entry on 23 March 2007 application for amendment received on 21 March 2007	Transaction	5 Fr	3215/07 x
157 entry on 4 July 2007 application for amendment received on 2 July 2007	Transaction	5 Fr	6300/07 h
159 entry on 9 October 2007 application for amendment received on 4 October 2007	Transaction	5 Fr	9416/07 s
162 entry on 16 November 2007 application for amendment received on 14 November 2007	Transaction	5 Fr	10716/07 b
164 entry on 15 February 2008 application for amendment received on 11 February 2008	Transaction	5 Fr	1795/08 t
166 entry on 18 April 2008 application for amendment received on 16 April 2008	Transaction	5 Fr	4821/08 t
167 entry on 22 April 2008 correction ex officio	Transaction	5 Fr	4936/08 k
168 entry on 16 May 2008 application for amendment received on 13 May 2008	Transaction	5 Fr	5662/08 d
175 entry on 19 March 2009 application for amendment received on 17 March 2009	Transaction	5 Fr	3093/09 i
176 entry on 16 April 2009 application for amendment received on 10 April 2009	Transaction	5 Fr	4600/09 a

Mag. phil. Ingrid Neff
Allgem. beeideter und gerichtlich zertifizierter Dolmetsch für Englisch

STRABAG
STRABAG AG

180 entry on 9 October 2009 application for amendment received on 6 October 2009	Transaction	5 Fr	11062/09 d
181 entry on 9 October 2009 application for amendment received on 6 October 2009	Transaction	5 Fr	11063/09 f
182 entry on 26 January 2010 application for amendment received on 18 January 2010	Transaction	5 Fr	588/10 i
183 entry on 19 March 2010 application for amendment received on 17 March 2010	Transaction	5 Fr	3003/10 k
185 entry on 17 April 2010 application for amendment received on 14 April 2010	Transaction	5 Fr	4818/10 f
187 entry on 28 May 2010 application for amendment received on 25 May 2010	Transaction	5 Fr	6285/10 m
194 entry on 8 February 2011 application for amendment received on 4 February 2011	Transaction	67 Fr	27/11 z
195 entry on 25 March 2011 application for amendment received on 18 March 2011	Transaction	67 Fr	342/11 m
197 entry on 15 April 2011 application for amendment received on 13 April 2011	Transaction	67 Fr	588/11 z
198 entry on 13 May 2011 application for amendment received on 11 May 2011	Transaction	67 Fr	1273/11 g
199 entry on 16 June 2011 application for amendment received on 14 June 2011	Transaction	67 Fr	1751/11 i
200 entry on 1 July 2011 application for amendment received on 24 June 2011	Transaction	67 Fr	1853/11 i
201 entry on 2 August 2011 application for amendment received on 27 July 2011	Transaction	67 Fr	2012/11 v
203 entry on 6 August 2011 electronic submission of financial statement received on 1 August 2011	Transaction	67 Fr	2045/11 t
206 entry on 11 October 2011 application for amendment received on 4 October 2011	Transaction	67 Fr	2618/11 i
207 entry on 16 November 2011 application for amendment received on 15 November 2011	Transaction	67 Fr	3069/11 y
208 entry on 24 January 2012 application for amendment received on 17 January 2012	Transaction	67 Fr	43/12 g
210 entry on 25 February 2012 application for amendment received on 23 February 2012	Transaction	67 Fr	162/12 g
212 entry on 15 August 2012 application for amendment received on 30 July 2012	Transaction	67 Fr	1411/12 v
214 entry on 31 October 2012 application for amendment received on 24 October 2012	Transaction	67 Fr	1987/12 s
216 entry on 21 December 2012 application for amendment received on 19 December 2012	Transaction	67 Fr	2392/12 k
217 entry on 8 January 2013 application for amendment received on 28 December 2012	Transaction	67 Fr	2429/12 s
218 entry on 22 February 2013 application for amendment received on 20 February 2013	Transaction	67 Fr	151/13 z
219 entry on 12 March 2013 application for amendment received on 8 March 2013	Transaction	67 Fr	225/13 h
220 entry on 4 April 2013 application for amendment received on 28 March 2013	Transaction	67 Fr	290/13 d
223 entry on 28 June 2013 application for amendment received on 26 June 2013	Transaction	67 Fr	606/13 v
224 entry on 6 July 2013 application for amendment received on 2 July 2013	Transaction	67 Fr	630/13 d
225 entry on 17 July 2013 correction ex officio	Transaction	67 Fr	681/13 d
226 entry on 20 July 2013 electronic submission of financial statement and application for amendment received on 18 July 2013	Transaction	67 Fr	688/13 p
227 entry on 31 July 2013 application for amendment received on 25 July 2013	Transaction	67 Fr	721/13 m
229 entry on 1 October 2013 application for amendment received on 26 September 2013	Transaction	67 Fr	1199/13 s

Mag. phil. Ingrid Neff
Allgem. beeideter und gerichtlich zertifizierter Dolmetsch für Englisch

STRABAG
STRABAG AG

22.08.2017

230 entry on 4 October 2013 correction ex officio	Transaction	67 Fr	1302/13 t
233 entry on 21 January 2014 application for amendment received on 17 January 2014	Transaction	67 Fr	46/14 d
235 entry on 25 March 2014 application for amendment received on 21 March 2014	Transaction	67 Fr	291/14 p
236 entry on 15 April 2014 application for amendment received on 10 April 2014	Transaction	67 Fr	3881/14 g
237 entry on 22 May 2014 application for amendment received on 16 May 2014	Transaction	67 Fr	505/14 d
239 entry on 5 September 2014 application for amendment received on 3 September 2014	Transaction	67 Fr	946/14 b
240 entry on 6 September 2014 application for amendment received on 4 September 2014	Transaction	67 Fr	948/14 f
241 entry on 6 November 2014 application for amendment received on 4 November 2014	Transaction	67 Fr	1523/14 a
243 entry on 20 November 2014 correction ex officio	Transaction	67 Fr	1542/14 d
245 entry on 27 January 2015 application for amendment received on 26 January 2015	Transaction	67 Fr	63/15 m
246 entry on 12 March 2015 application for amendment received on 27 February 2015	Transaction	67 Fr	173/15 z
247 entry on 27 March 2015 application for amendment received on 20 March 2015	Transaction	67 Fr	229/15 g
248 entry on 18 April 2015 application for amendment received on 13 April 2015	Transaction	67 Fr	288/15 v
251 entry on 7 August 2015 application for amendment received on 4 August 2015	Transaction	67 Fr	715/15 x
252 entry on 24 September 2015 application for amendment received on 21 September 2015	Transaction	67 Fr	1056/15 y
254 entry on 2 October 2015 application for amendment received on 30 September 2015	Transaction	67 Fr	1397/15 z
255 entry on 23 October 2015 application for amendment received on 20 October 2015	Transaction	67 Fr	1534/15 a
259 entry on 9 March 2016 application for amendment received on 7 March 2016	Transaction	67 Fr	177/16 p
260 entry on 26 April 2016 application for amendment received on 25 April 2016	Transaction	67 Fr	356/16 b
261 entry on 2 June 2016 application for amendment received on 31 May 2016	Transaction	67 Fr	478/16 g
263 entry on 27 July 2016 application for amendment received on 25 July 2016	Transaction	67 Fr	713/16 b
265 entry on 15 September 2016 application for amendment received on 13 September 2016	Transaction	67 Fr	943/16 s
267 entry on 16 December 2016 application for amendment received on 13 December 2016	Transaction	67 Fr	1620/16 k
268 entry on 4 January 2017 application for amendment received on 27 December 2016	Transaction	67 Fr	1700/16 d
269 entry on 24 January 2017 application for amendment received on 18 January 2017	Transaction	67 Fr	21/17 v
270 entry on 10 February 2017 application for amendment received on 7 February 2017	Transaction	67 Fr	79/17 d
271 entry on 4 March 2017 application for amendment received on 2 March 2017	Transaction	67 Fr	130/17 d
272 entry on 9 March 2017 application for amendment received on 7 March 2017	Transaction	67 Fr	146/17 b
273 entry on 30 March 2017 application for amendment received on 28 March 2017	Transaction	67 Fr	223/17 s
274 entry on 4 April 2017 application for amendment received on 30 March 2017	Transaction	67 Fr	232/17 d
275 entry on 4 May 2017 application for amendment received on 28 April 2017	Transaction	67 Fr	327/17 v
276 entry on 10 June 2017 application for amendment received on 8 June 2017	Transaction	67 Fr	433/17 z

Mag. phil. Ingrid Neff
Allgem. beeideter und gerichtlich zertifizierter Dolmetsch für Englisch

STRABAG
S I R A 22.06.2017

277 entry on 1 July 2017 Transaction 67 Fr 491/17 i
application for amendment received on 27 June 2017
278 entry on 4 July 2017 Transaction 67 Fr 541/17 h
correction ex officio
279 entry on 14 July 2017 Transaction 67 Fr 595/17 m
application for amendment received on 12 July 2017
280 entry on 8 August 2017 Transaction 67 Fr 590/17 f
electronic submission of financial statement received on 11 July 2017
281 entry on 9 August 2017 Transaction 67 Fr 673/17 b
application for amendment received on 2 August 2017

---------- INFORMATION BY THE AUSTRIAN NATIONAL BANK ----------

Valid identification number as of 22 August 2017: 42161
Branch office 001: 908258
Branch office 002: 1136810
Branch office 003: 985627
Branch office 006: 179949
Branch office 007: 844691
Branch office 008: 1055330
Branch office 009: 653870
Branch office 010: 209295

Prepared via ÖGIZIN Accounting Office ********** HA021
Court fee: EUR 3.53 **** 22 August 2017 09:40:04.443 38622595 ** LINES: 1464

Company Register **Queried on 22 August 2017 at 09:40:04 CET**

Round seal: Dr. Elisabeth NEUWIRTH
Notary Public
Vienna – Neubau

[signed]
Notary Public
as Court Commissioner

Mag. phil. Ingrid Neff
Allgem. beeideter und gerichtlich zertifizierter Dolmetsch für Englisch

Unter Berufung auf den abgelegten Eid bestätige ich, dass vorstehende Übersetzung mit der angehefteten Urschrift / ~~Kopie~~ in deutscher Sprache voll inhaltlich übereinstimmt.

With reference to the oath sworn by me, I certify that this is a true translation of the German original / ~~copy~~ attached.

Digital unterschrieben von Ingrid Neff
CN: CN = Ingrid Neff, SN = Neff, G = Ingrid, C = AT, OU = Allg. beeidete/r und gerichtlich zertifizierte/r Dolmetscher/in, T = Mag.
Datum: 2017.08.23 14:06:22 +02'00'

Gerichtlich zertifizierte Dolmetscherin
Certified court interpreter

D.O.O. VODOVOD I KANALIZACIJA ViK

117

STRABAG
STRABAG 22.08.2017

Page 28 of 28
1/17 i
17 h
m

REPUBLIK ÖSTERREICH
FIRMENBUCH

FB

Wien - Stichtag 22.8.2017

Auszug mit aktuellen Daten

FN 61689 w

Grundlage dieses Auszuges ist das Hauptbuch ergänzt um Daten aus der Urkundensammlung.
Letzte Eintragung am 09.08.2017 mit der Eintragungsnummer 281
zuständiges Gericht Landesgericht Klagenfurt

1 früher Handelsgericht Wien HRB 39101
Ersteintragung am 10.01.1930

FIRMA
60 STRABAG AG

RECHTSFORM
60 Aktiengesellschaft

SITZ in
57 politischer Gemeinde Spittal an der Drau

GESCHÄFTSANSCHRIFT
54 Ortenburgerstraße 27
9800 Spittal an der Drau

KAPITAL
79 EUR 12.000.000

ART der AKTIEN
138 1.500.000 Stückaktien

STICHTAG für JAHRESABSCHLUSS
1 31. Dezember

JAHRESABSCHLUSS (zuletzt eingetragen; weitere siehe Historie)
280 zum 31.12.2016 eingereicht am 11.07.2017

KONZERNABSCHLUSS (zuletzt eingetragen; weitere siehe Historie)
39 zum 31.12.1998 eingereicht am 21.06.1999

VERTRETUNGSBEFUGNIS
60 Die Gesellschaft wird, wenn mehrere Vorstandsmitglieder bestellt sind, durch zwei Vorstandsmitglieder gemeinsam oder durch eines von ihnen gemeinsam mit einem Prokuristen vertreten.
Der Aufsichtsrat wird ermächtigt, durch Beschluß einem, mehreren oder allen Vorstandsmitgliedern selbständige Vertretungsbefugnis zu erteilen oder besondere Vertretungsregelungen festzulegen.

SONSTIGE BESTIMMUNGEN
155 Der Vorstand besteht aus einer oder mehr, höchstens aber fünfundzwanzig Personen

ART DER BEKANNTMACHUNG
60 Die Bekanntmachungen der Gesellschaft erfolgen im Amtsblatt zur Wiener Zeitung.

118

https://www.verrechnungsstelle.at/fb/at.gv.justiz.fbw/ds/auszug/auszug

STRABAG
STRABAG AG

22.08.2017

66

39	Hauptversammlungsbeschluss vom 26.05.1999 Umwandlung der Stuag Bau-Aktiengesellschaft (FN 61689 w) in eine GmbH gemäß §§ 239 ff AktG.	020
43	Verschmelzungsvertrag vom 15.07.1999	022
43	Generalversammlungsbeschluss vom 15.07.1999 der Rella Baugesellschaft m.b.H. (FN 72944 x) als übertragende Gesellschaft. Verschmelzung mit dieser Gesellschaft als übernehmende Gesellschaft. Sitz der übertragenden Gesellschaft in Wien	023
76	Generalversammlungsbeschluss vom 10.07.2000 Neufassung des Gesellschaftsvertrages.	024
56	Generalversammlungsbeschluss vom 10.07.2000 Spaltung zur Aufnahme eines Vermögensteiles der Strabag Österreich GmbH (FN 165627 w) und zwar des Teilbetriebes "Baubetrieb" gemäß Spaltungs- und Übernahmsvertrag vom 02.06.2000.	025
58	Generalversammlungsbeschluss vom 10.07.2000 Spaltung zur Aufnahme eines Vermögensteiles der ILBAU Gesellschaft m.b.H. (FN 88888 v) und zwar des Teilbetriebes "Baubetrieb" gemäß Spaltungs- und Übernahmsvertrag vom 02.06.2000	026
59	Generalversammlungsbeschluss vom 10.07.2000 Spaltung	027
59	zur Aufnahme in die ASPHALT & BETON GmbH (FN 171708 m) durch Übertragung des Teilbetriebes "Asphaltmischanlagen, Steine und Erde und Betonmischanlagen" gemäß Spaltungs- und Übernahmsvertrag vom 02.06.2000	028
65	Satzung vom 10.07.2000	029
65	Generalversammlungsbeschluss vom 10.07.2000 Umwandlung der STRABAG GmbH (FN 61689 w) in eine Aktiengesellschaft gemäß §§ 245 ff AktG.	030
64	Verschmelzungsvertrag vom 06.09.2000	031
64	Hauptversammlungsbeschluss vom 06.09.2000 Diese Gesellschaft wurde als übernehmende Gesellschaft mit der Dipl.Ing. Brandstetter & Co. Baugesellschaft m.b.H. (FN 101500 s) als übertragende Gesellschaft verschmolzen. Sitz der übertragenden Gesellschaft in Wien.	032
66	Verschmelzungsvertrag vom 06.09.2000	033

D.O.O. VODOVOD I KANALIZACIJA DANILOVGRAD VIK

STRABAG STRABAG AG

66 Hauptversammlungsbeschluss vom 06.09.2000
Diese Gesellschaft wurde als 034
übernehmende Gesellschaft mit der
Ing. Felix Penka G.m.b.H.
(FN 97221 y)
als übertragende Gesellschaft verschmolzen.
Sitz der übertragenden Gesellschaft in Wien.

68 Verschmelzungsvertrag vom 06.09.2000

68 Hauptversammlungsbeschluss vom 06.09.2000 035
Diese Gesellschaft wurde als 036
übernehmende Gesellschaft mit der
SÜDWESTBAU Ges.m.b.H.
(FN 66954 m)
als übertragende Gesellschaft verschmolzen.
Sitz der übertragenden Gesellschaft in Leibnitz.

69 Verschmelzungsvertrag vom 06.09.2000

69 Hauptversammlungsbeschluss vom 06.09.2000 037
Diese Gesellschaft wurde als 038
übernehmende Gesellschaft mit der
A. u. H. Zisser Gesellschaft m.b.H.
(FN 118232 x)
als übertragende Gesellschaft verschmolzen.
Sitz der übertragenden Gesellschaft in Wien.

70 Verschmelzungsvertrag vom 06.09.2000

70 Hauptversammlungsbeschluss vom 06.09.2000 039
Diese Gesellschaft wurde als 040
übernehmende Gesellschaft mit der
Dipl. Ing. Kaltenegger
Gesellschaft m.b.H.
(FN 79218 y)
als übertragende Gesellschaft verschmolzen.
Sitz der übertragenden Gesellschaft in Fohnsdorf.

71 Verschmelzungsvertrag vom 06.09.2000

71 Hauptversammlungsbeschluss vom 06.09.2000 041
Diese Gesellschaft wurde als 042
übernehmende Gesellschaft mit der
Innerebner Hoch- und Tiefbau GmbH
(FN 157690 y)
als übertragende Gesellschaft verschmolzen.
Sitz der übertragenden Gesellschaft in Innsbruck

72 Verschmelzungsvertrag vom 06.09.2000

72 Hauptversammlungsbeschluss vom 06.09.2000 043
Diese Gesellschaft wurde als 044
übernehmende Gesellschaft mit der
K BAU Gesellschaft m.b.H.
(FN 179194 x)
als übertragende Gesellschaft verschmolzen.
Sitz der übertragenden Gesellschaft in Klagenfurt.

67 Übernahme des Vermögens der
Ing. Herbert Fischer 045
Gesellschaft m.b.H. & Co. KG.
(FN 8843 f)
gemäß § 142 HGB.

79 Satzung mit Hauptversammlungsbeschluss vom 20.06.2001
gemäß 1. Euro-JuBeG angepasst. 046
Kapitalerhöhung aus Gesellschaftsmitteln von

https://www.verrechnungsstelle.at/fb/at.gv.justiz.fbw/ds/auszug/auszug

STRABAG
STRABAG AG

EUR 10.900.925,13 um EUR 1.099.074,87 auf
EUR 12.000.000,- beschlossen und durchgeführt.
Änderung der Satzung in den §§ 4, 17 und 23

78 Hauptversammlungsbeschluss vom 20.06.2001 047
Änderung der Satzung in den §§ 4 und 17

81 Verschmelzungsvertrag vom 14.09.2001 048

81 Hauptversammlungsbeschluss vom 14.09.2001 049
Diese Gesellschaft wurde als
übernehmende Gesellschaft mit der
"KONSTRUKTIVA" Projektentwicklung
und Bauträger GmbH
(FN 31579 s)
als übertragende Gesellschaft verschmolzen.
Sitz der übertragenden Gesellschaft in wien

82 Verschmelzungsvertrag vom 14.09.2001 050

82 Hauptversammlungsbeschluss vom 14.09.2001 051
Diese Gesellschaft wurde als
übernehmende Gesellschaft mit der
SF-BAU Projektentwicklung
Gesellschaft m.b.H.
(FN 36198 h)
als übertragende Gesellschaft verschmolzen.
Sitz der übertragenden Gesellschaft in Wien

83 Verschmelzungsvertrag vom 14.09.2001 052

83 Hauptversammlungsbeschluss vom 14.09.2001 053
Diese Gesellschaft wurde als
übernehmende Gesellschaft mit der
Zeller - Bauunternehmung
Gesellschaft m.b.H.
(FN 36208 y)
als übertragende Gesellschaft verschmolzen.
Sitz der übertragenden Gesellschaft in Innsbruck.

85 Übernahme des Vermögens der 054
Baumaschinen Leasing
Gesellschaft m.b.H. & Co. KG
(FN 19926 d)
gemäß § 142 HGB.

109 Hauptversammlungsbeschluss vom 09.04.2003 055
Änderung der Satzung in § 7

138 Hauptversammlungsbeschluss vom 27.06.2005 056
Änderung der Satzung in § 7.

155 Hauptversammlungsbeschluss vom 19.01.2007 057
Änderung der Satzung im § 7.

212 Hauptversammlungsbeschluss vom 02.07.2012 058
Änderung der Satzung in den §§ 3, 5, 6, 9, 16 und 22.

243 Unternehmenskaufvertrag vom 21.08.2014 059
Übertragung des Teilbetriebes Rauchgasreinigung von der
STRABAG Energy Technologies GmbH (FN 297520 f) und der
STRABAG AG (FN 61689 w) an die YARA Environmental
Technologies GmbH (FN 419828 w)
Haftungsausschluss gemäß § 38 Abs. 4 UGB
Ausschluss der Haftung der YARA Environmental Technologies
GmbH für nicht ausdrücklich im Unternehmenskaufvertrag vom
21.8.2014 übernommene Verbindlichkeiten des Teilbetriebes
Rauchgasreinigung von der STRABAG Energy Technologies GmbH

121

STRABAG
STRABAG AG

(FN 297520 f) und der STRABAG AG (FN 61689 w).

VORSTAND

CC Gerhard Biswanger, geb. 12.08.1957
156 Mitglied
vertritt seit 28.02.2007 gemeinsam mit
einem weiteren Vorstandsmitglied oder einem Prokuristen

CP Ing Theodor Klais, geb. 09.04.1953
104 Mitglied
vertritt seit 01.01.2003 gemeinsam mit
einem weiteren Vorstandsmitglied oder einem Prokuristen

DI Franz Urban, geb. 20.01.1960
271 Mitglied
vertritt seit 01.03.2017 gemeinsam mit
einem weiteren Vorstandsmitglied oder
einer/einem Prokuristin/Prokuristen

DL Mag Wolfgang Zechmeister, geb. 10.09.1962
154 Mitglied
vertritt seit 01.01.2007 gemeinsam mit
einem weiteren Vorstandsmitglied oder einem Prokuristen

HC Mag Ing Manfred Rosenauer, geb. 11.04.1957
104 Mitglied
vertritt seit 01.01.2003 gemeinsam mit
einem weiteren Vorstandsmitglied oder einem Prokuristen

HN Markus Engerth, geb. 01.06.1968
274 Mitglied
vertritt seit 01.04.2017 gemeinsam mit
einem weiteren Vorstandsmitglied oder
einer/einem Prokuristin/Prokuristen

HP Ing Reinhard Kerschner, geb. 06.03.1966
241 vertritt seit 01.11.2014 gemeinsam mit
einem weiteren Vorstandsmitglied oder
einer/einem Prokuristin/Prokuristen

HR Marina Humitsch, geb. 28.08.1958
146 Mitglied
vertritt seit 30.03.2006 gemeinsam mit
einem weiteren Vorstandsmitglied oder einem Prokuristen

HU Mag Herbert Krutina, geb. 14.07.1960
132 Mitglied
vertritt seit 01.01.2005 gemeinsam mit
einem weiteren Vorstandsmitglied oder einem Prokuristen

IS Dipl Ing Dragan Pavelic, geb. 17.03.1956
223 vertritt seit 01.01.2013 gemeinsam mit
einem weiteren Vorstandsmitglied oder einem Prokuristen

KT Gerald Kienast, geb. 24.09.1965
156 Mitglied
vertritt seit 28.02.2007 gemeinsam mit
einem weiteren Vorstandsmitglied oder einem Prokuristen

LJ Alexander Ortenberg, geb. 28.04.1966
159 vertritt seit 26.09.2007 gemeinsam mit
einem weiteren Vorstandsmitglied oder einem Prokuristen

OH Dipl.-Ing. (FH) Edgar Schömig, geb. 01.10.1956
225 vertritt seit 01.04.2013 gemeinsam mit
einem weiteren Vorstandsmitglied oder einem Prokuristen

OJ Karsten Richter, geb. 18.11.1959
233 vertritt seit 01.01.2014 gemeinsam mit
einem weiteren Vorstandsmitglied oder
einer/einem Prokuristin/Prokuristen

PROKURIST/IN

BS Mag. Gerold Laubreiter, geb. 30.11.1962
123 vertritt seit 01.03.2004 gemeinsam mit
einem Vorstandsmitglied oder einem weiteren Prokuristen

DC Ing Günther Rossbory, geb. 20.05.1953
62 vertritt seit 05.09.2000 gemeinsam mit
einem Vorstandsmitglied oder einem weiteren Prokuristen

DM Dipl-Ing Alfred Zeiler, geb. 28.08.1957

https://www.verrechnungsstelle.at/fb/at.gv.justiz.fbw/ds/auszug/auszug

STRABAG
STRABAG AG
22.08.2017

62 vertritt seit 05.09.2000 gemeinsam mit
einem Vorstandsmitglied oder einem weiteren Prokuristen

DO Ing Manfred Aschaber, geb. 08.03.1958
116 vertritt seit 30.09.2003 gemeinsam mit
einem Vorstandsmitglied oder einem weiteren Prokuristen

DU Dipl-Ing Werner Kunz, geb. 20.11.1956
62 vertritt seit 05.09.2000 gemeinsam mit
einem Vorstandsmitglied oder einem weiteren Prokuristen
wobei die Vertretungsbefugnis beschränkt ist auf
die Hauptniederlassung.

DX Ing Wolfgang Prohazka, geb. 19.07.1958
281 vertritt seit 10.07.2015 gemeinsam mit
einem Vorstandsmitglied oder
einer/einem weiteren Prokuristin/Prokuristen

EK Ing. Bernhard Kowatsch, geb. 24.03.1968
227 vertritt seit 03.07.2013 gemeinsam mit
einem Vorstandsmitglied oder einem weiteren Prokuristen
wobei die Vertretungsbefugnis beschränkt ist auf
die Zweigniederlassung 010.

EP Gerhard Wertl, geb. 21.08.1954
62 vertritt seit 05.09.2000 gemeinsam mit
einem Vorstandsmitglied oder einem weiteren Prokuristen
wobei die Vertretungsbefugnis beschränkt ist auf
die Zweigniederlassung 010.

EQ Stefan Altziebler, geb. 23.07.1957
62 vertritt seit 05.09.2000 gemeinsam mit
einem Vorstandsmitglied oder einem weiteren Prokuristen
wobei die Vertretungsbefugnis beschränkt ist auf
die Zweigniederlassung 007.

FQ Dipl-Ing Manfred Lechner, geb. 16.07.1963
137 vertritt seit 01.05.2005 gemeinsam mit
einem Vorstandsmitglied oder einem weiteren Prokuristen

FT Ing Wolfgang Dvorak, geb. 04.05.1958
62 vertritt seit 05.09.2000 gemeinsam mit
einem Vorstandsmitglied oder einem weiteren Prokuristen
wobei die Vertretungsbefugnis beschränkt ist auf
die Zweigniederlassung 009.

GA Dipl-Ing Mario Rabitsch, geb. 03.03.1961
127 vertritt seit 01.08.2004 gemeinsam mit
einem Vorstandsmitglied oder einem weiteren Prokuristen
wobei die Vertretungsbefugnis beschränkt ist auf
die Hauptniederlassung.

GG Herbert Vanzo, geb. 16.06.1957
116 vertritt seit 30.09.2003 gemeinsam mit
einem Vorstandsmitglied oder einem weiteren Prokuristen

GV Dipl Ing Johannes Kals, geb. 26.05.1961
155 vertritt seit 10.01.2007 gemeinsam mit
einem Vorstandsmitglied oder einem weiteren Prokuristen

GX Werner Kribernegg, geb. 19.04.1958
92 vertritt seit 25.04.2002 gemeinsam mit
einem Vorstandsmitglied oder einem weiteren Prokuristen

GZ DI Harald Kratochwil, geb. 21.12.1959
135 vertritt seit 01.03.2005 gemeinsam mit
einem Vorstandsmitglied oder einem weiteren Prokuristen

HI Walter Rützler, geb. 18.04.1958
112 vertritt seit 25.07.2003 gemeinsam mit
einem Vorstandsmitglied oder einem weiteren Prokuristen

HJ Heinz Sumper, geb. 05.01.1961
112 vertritt seit 25.07.2003 gemeinsam mit
einem Vorstandsmitglied oder einem weiteren Prokuristen

HL Dipl-Ing Frank Fercher, geb. 29.04.1963
112 vertritt seit 25.07.2003 gemeinsam mit
einem Vorstandsmitglied oder einem weiteren Prokuristen
wobei die Vertretungsbefugnis beschränkt ist auf
die Zweigniederlassung 009.

HM Walter Schmidt, geb. 20.01.1959
112 vertritt seit 25.07.2003 gemeinsam mit
einem Vorstandsmitglied oder einem weiteren Prokuristen

157

D.O.O. "VODOVOD I KANALIZACIJA" DANILOVGRAD VIK

123

STRABAG
STRABAG AG

wobei die Vertretungsbefugnis beschränkt ist auf die Zweigniederlassung 009.

HO Ing Manfred Trnka, geb. 13.02.1962
157 vertritt seit 01.04.2007 gemeinsam mit einem Vorstandsmitglied oder einem weiteren Prokuristen

HT Mag Gerald Zangl, geb. 17.12.1967
135 vertritt seit 01.03.2005 gemeinsam mit einem Vorstandsmitglied oder einem weiteren Prokuristen

HV Felix Koselleck, geb. 24.06.1963
149 vertritt seit 01.06.2006 gemeinsam mit einem Vorstandsmitglied oder einem weiteren Prokuristen

HW Mag Günther Metzler, geb. 18.11.1966
118 vertritt seit 08.11.2003 gemeinsam mit einem Vorstandsmitglied oder einem weiteren Prokuristen

HX Johann König, geb. 12.12.1964
118 vertritt seit 08.11.2003 gemeinsam mit einem Vorstandsmitglied oder einem weiteren Prokuristen

HY Franz Redl, geb. 06.09.1964
118 vertritt seit 08.11.2003 gemeinsam mit einem Vorstandsmitglied oder einem weiteren Prokuristen wobei die Vertretungsbefugnis beschränkt ist auf die Hauptniederlassung und die Zweigniederlassung 007.

IB Dipl Ing Gerhard Streimel, geb. 23.07.1962
157 vertritt seit 01.04.2007 gemeinsam mit einem Vorstandsmitglied oder einem weiteren Prokuristen

IC Dipl Ing Martin Ullrich, geb. 09.02.1967
121 vertritt seit 26.01.2004 gemeinsam mit einem Vorstandsmitglied oder einem weiteren Prokuristen wobei die Vertretungsbefugnis beschränkt ist auf die Hauptniederlassung.

ID Dipl Ing Dr Georg Kroyer, geb. 28.09.1967
272 vertritt seit 01.03.2017 gemeinsam mit einem Vorstandsmitglied oder einer/einem weiteren Prokuristin/Prokuristen wobei die Vertretungsbefugnis beschränkt ist auf die Zweigniederlassung 006 und 007.

IG Dipl Ing Thomas Wancata, geb. 19.07.1964
123 vertritt seit 01.03.2004 gemeinsam mit einem Vorstandsmitglied oder einem weiteren Prokuristen

II Ing Günther Vojacek, geb. 14.07.1955
123 vertritt seit 01.03.2004 gemeinsam mit einem Vorstandsmitglied oder einem weiteren Prokuristen wobei die Vertretungsbefugnis beschränkt ist auf die Zweigniederlassung 007.

IL Mag Franz Burgstaller, geb. 14.05.1966
219 vertritt seit 01.01.2013 gemeinsam mit einem Vorstandsmitglied oder einem weiteren Prokuristen

IU Ing Heimo Oberwinkler, geb. 10.05.1963
133 vertritt seit 01.01.2005 gemeinsam mit einem Vorstandsmitglied oder einem weiteren Prokuristen

JA Ing Mag Ingo Sattlegger, geb. 04.08.1966
135 vertritt seit 01.03.2005 gemeinsam mit einem Vorstandsmitglied oder einem weiteren Prokuristen

JC Dipl Ing Wolfgang Dittrich, geb. 25.09.1967
237 vertritt seit 01.04.2014 gemeinsam mit einem Vorstandsmitglied oder einem weiteren Prokuristen

JD Maximilian Waltl, geb. 03.06.1959
137 vertritt seit 01.05.2005 gemeinsam mit einem Vorstandsmitglied oder einem weiteren Prokuristen

JG Ing Roland Pomarolli, geb. 16.06.1965
137 vertritt seit 01.05.2005 gemeinsam mit einem Vorstandsmitglied oder einem weiteren Prokuristen wobei die Vertretungsbefugnis beschränkt ist auf die Zweigniederlassung 002.

JH Ing Bernhard Prantl, geb. 16.04.1964
137 vertritt seit 01.05.2005 gemeinsam mit einem Vorstandsmitglied oder einem weiteren Prokuristen wobei die Vertretungsbefugnis beschränkt ist auf

STRABAG
STRABAG AG

die Zweigniederlassung 002.

JJ Klaus Stefan Unger, geb. 04.09.1961
142 vertritt seit 01.09.2005 gemeinsam mit
einem Vorstandsmitglied oder einem weiteren Prokuristen
wobei die Vertretungsbefugnis beschränkt ist auf
die Hauptniederlassung.

JK Ing Wolfgang Lehner, geb. 02.10.1962
157 vertritt seit 01.04.2007 gemeinsam mit
einem Vorstandsmitglied oder einem weiteren Prokuristen

JN Mag Ing Stephan Jainöcker, geb. 29.09.1965
146 vertritt seit 01.04.2006 gemeinsam mit
einem Vorstandsmitglied oder einem weiteren Prokuristen

JQ Gustav Schelberger, geb. 16.10.1956
146 vertritt seit 01.04.2006 gemeinsam mit
einem Vorstandsmitglied oder einem weiteren Prokuristen
wobei die Vertretungsbefugnis beschränkt ist auf
die Hauptniederlassung.

JT Ing Gerold Alfred Pirker, geb. 15.11.1969
146 vertritt seit 01.04.2006 gemeinsam mit
einem Vorstandsmitglied oder einem weiteren Prokuristen
wobei die Vertretungsbefugnis beschränkt ist auf
die Zweigniederlassung 003 und 008.

JX Dipl Ing Michael Markart, geb. 24.07.1958
147 vertritt seit 01.05.2006 gemeinsam mit
einem Vorstandsmitglied oder einem weiteren Prokuristen

JY Erwin Wurzer, geb. 18.05.1953
147 vertritt seit 01.05.2006 gemeinsam mit
einem Vorstandsmitglied oder einem weiteren Prokuristen

JZ Dr James Lee Weiss, geb. 10.01.1968
157 vertritt seit 01.04.2007 gemeinsam mit
einem Vorstandsmitglied oder einem weiteren Prokuristen

KB Dipl Ing Norbert Komma, geb. 22.06.1959
147 vertritt seit 01.05.2006 gemeinsam mit
einem Vorstandsmitglied oder einem weiteren Prokuristen
wobei die Vertretungsbefugnis beschränkt ist auf
die Hauptniederlassung.

KD DiplIng DiplIng Axel Otto Thomaschütz, geb. 05.08.1975
147 vertritt seit 01.05.2006 gemeinsam mit
einem Vorstandsmitglied oder einem weiteren Prokuristen
wobei die Vertretungsbefugnis beschränkt ist auf
die Hauptniederlassung.

KE Christian Matzner, geb. 04.04.1965
147 vertritt seit 01.05.2006 gemeinsam mit
einem Vorstandsmitglied oder einem weiteren Prokuristen
wobei die Vertretungsbefugnis beschränkt ist auf
die Zweigniederlassung 009.

KF Ing Walter Burger, geb. 14.06.1967
147 vertritt seit 01.05.2006 gemeinsam mit
einem Vorstandsmitglied oder einem weiteren Prokuristen
wobei die Vertretungsbefugnis beschränkt ist auf
die Zweigniederlassung 009.

KI DWT Dipl Ing MBA Günter Moser, geb. 31.10.1967
199 vertritt seit 24.05.2011 gemeinsam mit
einem Vorstandsmitglied oder einem weiteren Prokuristen

KN Mag Heribert Herzog, geb. 15.09.1964
155 vertritt seit 10.01.2007 gemeinsam mit
einem Vorstandsmitglied oder einem weiteren Prokuristen

KO Christian Hauser, geb. 02.10.1962
155 vertritt seit 10.01.2007 gemeinsam mit
einem Vorstandsmitglied oder einem weiteren Prokuristen

KP Josef Rester, geb. 07.06.1960
155 vertritt seit 10.01.2007 gemeinsam mit
einem Vorstandsmitglied oder einem weiteren Prokuristen

KQ Ing Stefan Hanser, geb. 06.11.1966
251 vertritt seit 10.07.2015 gemeinsam mit
einem weiteren Vorstandsmitglied oder
einer/einem Prokuristin/Prokuristen

KU Ing Gerald Stadler, geb. 18.02.1965

D.O.O. VODOVOD I KANALIZACIJA DANILOVGRAD ViK

STRABAG
STRABAG AG

156 vertritt seit 01.02.2007 gemeinsam mit
einem Vorstandsmitglied oder einem weiteren Prokuristen
wobei die Vertretungsbefugnis beschränkt ist auf
die Zweigniederlassung 003 und 008.

KV Ing Helmut Atzlinger, geb. 18.08.1964
156 vertritt seit 01.02.2007 gemeinsam mit
einem Vorstandsmitglied oder einem weiteren Prokuristen
wobei die Vertretungsbefugnis beschränkt ist auf
die Zweigniederlassung 003 und 008.

KW Ing Heinz Peter Fuchs, geb. 06.04.1965
156 vertritt seit 01.02.2007 gemeinsam mit
einem Vorstandsmitglied oder einem weiteren Prokuristen
wobei die Vertretungsbefugnis beschränkt ist auf
die Zweigniederlassung 003 und 008.

LA Gerald Urban, geb. 22.02.1970
157 vertritt seit 15.03.2007 gemeinsam mit
einem Vorstandsmitglied oder einem weiteren Prokuristen
wobei die Vertretungsbefugnis beschränkt ist auf
die Zweigniederlassung 009.

LB Raimund Desalla, geb. 03.01.1962
157 vertritt seit 10.05.2007 gemeinsam mit
einem Vorstandsmitglied oder einem weiteren Prokuristen

LC Ing Martin Kaftan, geb. 13.09.1970
279 vertritt seit 01.07.2017 gemeinsam mit
einem Vorstandsmitglied oder einer/einem weiteren
Prokuristin/Prokuristen

LL Dipl Ing Thomas Höfner, geb. 02.01.1971
162 vertritt seit 28.08.2007 gemeinsam mit
einem Vorstandsmitglied oder einem weiteren Prokuristen
wobei die Vertretungsbefugnis beschränkt ist auf
die Hauptniederlassung.

LN Mag Klaus-Dieter Pertl, geb. 25.04.1971
162 vertritt seit 28.08.2007 gemeinsam mit
einem Vorstandsmitglied oder einem weiteren Prokuristen
wobei die Vertretungsbefugnis beschränkt ist auf
die Hauptniederlassung.

LR Ing. Klaus Heller, geb. 21.09.1966
164 vertritt seit 01.01.2008 gemeinsam mit
einem Vorstandsmitglied oder einem weiteren Prokuristen
wobei die Vertretungsbefugnis beschränkt ist auf
die Zweigniederlassung 003 und 007.

LT Walter Schwab, geb. 03.07.1961
164 vertritt seit 01.01.2008 gemeinsam mit
einem Vorstandsmitglied oder einem weiteren Prokuristen

LY Alois Neuherz, geb. 17.08.1963
166 vertritt seit 01.03.2008 gemeinsam mit
einem Vorstandsmitglied oder einem weiteren Prokuristen
wobei die Vertretungsbefugnis beschränkt ist auf
die Hauptniederlassung.

MB Ing Kurt Schandl, geb. 14.06.1956
166 vertritt seit 01.03.2008 gemeinsam mit
einem Vorstandsmitglied oder einem weiteren Prokuristen
wobei die Vertretungsbefugnis beschränkt ist auf
die Zweigniederlassung 002.

MC Dr Kilian Schwarzacher, geb. 15.03.1958
168 vertritt seit 01.05.2008 gemeinsam mit
einem Vorstandsmitglied oder einem weiteren Prokuristen

MH Ing Walter Bäuml, geb. 13.02.1973
175 vertritt seit 01.01.2009 gemeinsam mit
einem Vorstandsmitglied oder einem weiteren Prokuristen
wobei die Vertretungsbefugnis beschränkt ist auf
die Zweigniederlassung 009.

MN Martina Hofmann, geb. 07.01.1966
176 vertritt seit 01.03.2009 gemeinsam mit
einem Vorstandsmitglied oder einem weiteren Prokuristen

MR Ing Christoph Totschnig, geb. 08.03.1964
183 vertritt seit 01.02.2010 gemeinsam mit
einem Vorstandsmitglied oder einem weiteren Prokuristen

STRABAG
STRABAG AG

214

wobei die Vertretungsbefugnis beschränkt ist auf die Zweigniederlassung 002.

MT Dipl Ing Gerhard Urschitz, geb. 26.05.1968
267 vertritt seit 01.11.2016 gemeinsam mit einem Vorstandsmitglied oder einer/einem weiteren Prokuristin/Prokuristen

MU Klaus Kathmann, geb. 12.05.1964
183 vertritt seit 21.01.2010 gemeinsam mit einem Vorstandsmitglied oder einem weiteren Prokuristen wobei die Vertretungsbefugnis beschränkt ist auf die Hauptniederlassung.

NB Ing Robert Denk, geb. 22.07.1971
194 vertritt seit 01.01.2011 gemeinsam mit einem Vorstandsmitglied oder einem weiteren Prokuristen wobei die Vertretungsbefugnis beschränkt ist auf die Zweigniederlassung 009.

NC Gerhard Gruber, geb. 04.08.1957
195 vertritt seit 01.01.2011 gemeinsam mit einem Vorstandsmitglied oder einem weiteren Prokuristen wobei die Vertretungsbefugnis beschränkt ist auf die Zweigniederlassung 003.

ND Ing Robert Krakhofer, geb. 05.06.1967
195 vertritt seit 23.02.2011 gemeinsam mit einem Vorstandsmitglied oder einem weiteren Prokuristen wobei die Vertretungsbefugnis beschränkt ist auf die Hauptniederlassung.

NE Dipl Ing Peter Reichenspurner, geb. 17.01.1958
195 vertritt seit 01.03.2011 gemeinsam mit einem Vorstandsmitglied oder einem weiteren Prokuristen wobei die Vertretungsbefugnis beschränkt ist auf die Hauptniederlassung.

NH Mag (FH) Markus Fischer, geb. 18.07.1976
200 vertritt seit 01.07.2011 gemeinsam mit einem Vorstandsmitglied oder einem weiteren Prokuristen

NJ Ing Fritz Peter Eder, geb. 07.02.1959
200 vertritt seit 01.06.2011 gemeinsam mit einem Vorstandsmitglied oder einem weiteren Prokuristen wobei die Vertretungsbefugnis beschränkt ist auf die Hauptniederlassung.

NK Ing. Johann Pölzl, geb. 09.07.1970
201 vertritt seit 01.07.2011 gemeinsam mit einem Vorstandsmitglied oder einem weiteren Prokuristen

NL Stefan Olsacher, geb. 09.03.1957
201 vertritt seit 01.07.2011 gemeinsam mit einem Vorstandsmitglied oder einem weiteren Prokuristen wobei die Vertretungsbefugnis beschränkt ist auf die Hauptniederlassung.

NO DI (FH) Robert Pavlik, geb. 20.12.1969
206 vertritt seit 19.09.2011 gemeinsam mit einem Vorstandsmitglied oder einem weiteren Prokuristen wobei die Vertretungsbefugnis beschränkt ist auf die Hauptniederlassung.

NP Ing Peter Goca, geb. 24.04.1968
207 vertritt seit 21.10.2011 gemeinsam mit einem Vorstandsmitglied oder einem weiteren Prokuristen wobei die Vertretungsbefugnis beschränkt ist auf die Hauptniederlassung.

NS Dipl.-Ing. Hellfried Gugel, geb. 19.07.1966
208 vertritt seit 01.01.2012 gemeinsam mit einem Vorstandsmitglied oder einem weiteren Prokuristen wobei die Vertretungsbefugnis beschränkt ist auf die Zweigniederlassung 001.

NT Dipl.-Ing. Dr. Herwig Schwarz, geb. 14.01.1973
210 vertritt seit 15.02.2012 gemeinsam mit einem Vorstandsmitglied oder einem weiteren Prokuristen wobei die Vertretungsbefugnis beschränkt ist auf die Hauptniederlassung.

NW Dipl.-BW Marian Kloss, geb. 26.01.1957

127

STRABAG
STRABAG AG

214 vertritt seit 13.09.2012 gemeinsam mit
einem Vorstandsmitglied oder einem weiteren Prokuristen
NZ Ing. Ferdinand Mittermaier, geb. 03.12.1958
216 vertritt seit 01.12.2012 gemeinsam mit
einem Vorstandsmitglied oder einem weiteren Prokuristen
wobei die Vertretungsbefugnis beschränkt ist auf
die Zweigniederlassung 001.
OA Albert Waltl, geb. 30.03.1969
217 vertritt seit 01.01.2013 gemeinsam mit
einem Vorstandsmitglied oder einem weiteren Prokuristen
OB Edith Herz, geb. 25.12.1960
217 vertritt seit 01.01.2013 gemeinsam mit
einem Vorstandsmitglied oder einem weiteren Prokuristen
OC Dipl.-Ing. FH Holger Specht, geb. 15.04.1958
218 vertritt seit 01.01.2013 gemeinsam mit
einem Vorstandsmitglied oder einem weiteren Prokuristen
wobei die Vertretungsbefugnis beschränkt ist auf
die Hauptniederlassung.
OD Dipl.-Ing. (FH) Christian Sadleder, geb. 17.01.1977
220 vertritt seit 01.04.2013 gemeinsam mit
einem Vorstandsmitglied oder einem weiteren Prokuristen
wobei die Vertretungsbefugnis beschränkt ist auf
die Hauptniederlassung.
OE Dipl.-Ing. Walter Neurathner, geb. 20.06.1973
220 vertritt seit 01.04.2013 gemeinsam mit
einem Vorstandsmitglied oder einem weiteren Prokuristen
wobei die Vertretungsbefugnis beschränkt ist auf
die Hauptniederlassung.
OI Franz Aigner, geb. 28.03.1966
236 vertritt seit 06.03.2014 gemeinsam mit
einem Vorstandsmitglied oder einem weiteren Prokuristen
wobei die Vertretungsbefugnis beschränkt ist auf
die Zweigniederlassung 006 und 007.
OK Dipl.-Ing. (FH) Dieter Wilken, geb. 22.02.1969
233 vertritt seit 01.01.2014 gemeinsam mit
einem Vorstandsmitglied oder einer/einem weiteren
Prokuristin/Prokuristen
wobei die Vertretungsbefugnis beschränkt ist auf
die Hauptniederlassung.
OM Dipl.-Ing. Dirk Grüneberg, geb. 23.12.1965
235 vertritt seit 10.02.2014 gemeinsam mit
einem Vorstandsmitglied oder einer/einem weiteren
Prokuristin/Prokuristen
wobei die Vertretungsbefugnis beschränkt ist auf
die Hauptniederlassung.
ON DDipl.-Ing. Simon Wild, geb. 17.08.1979
235 vertritt seit 10.02.2014 gemeinsam mit
einem Vorstandsmitglied oder einer/einem weiteren
Prokuristin/Prokuristen
wobei die Vertretungsbefugnis beschränkt ist auf
die Hauptniederlassung.
OO Manfred Schöppl, geb. 05.06.1969
251 vertritt seit 10.07.2015 gemeinsam mit
einem weiteren Vorstandsmitglied oder
einer/einem Prokuristin/Prokuristen
OP Ing. Robert Kallinger, geb. 07.02.1968
236 vertritt seit 06.03.2014 gemeinsam mit
einem Vorstandsmitglied oder einer/einem weiteren
Prokuristin/Prokuristen
wobei die Vertretungsbefugnis beschränkt ist auf
die Zweigniederlassung 006 und 007.
OQ Jens Hoffmann, geb. 15.07.1976
240 vertritt seit 08.08.2014 gemeinsam mit
einem weiteren Vorstandsmitglied oder
einer/einem Prokuristin/Prokuristen
wobei die Vertretungsbefugnis beschränkt ist auf
die Hauptniederlassung.
OR Jürgen Raschendorfer, geb. 27.07.1972

259

270 vertritt seit 01.01.2017 gemeinsam mit einem Vorstandsmitglied oder einer/einem weiteren Prokuristin/Prokuristen

OS Franz Weissinger, geb. 20.06.1960
245 vertritt seit 01.01.2015 gemeinsam mit einem Vorstandsmitglied oder einer/einem weiteren Prokuristin/Prokuristen

OT Mag. Samir Ljaic, geb. 29.07.1980
246 vertritt seit 15.01.2015 gemeinsam mit einem Vorstandsmitglied oder einer/einem weiteren Prokuristin/Prokuristen
wobei die Vertretungsbefugnis beschränkt ist auf die Hauptniederlassung.

OV Dipl.-Ing. Erwin Fahrnberger, geb. 04.04.1973
246 vertritt seit 15.01.2015 gemeinsam mit einem Vorstandsmitglied oder einer/einem weiteren Prokuristin/Prokuristen
wobei die Vertretungsbefugnis beschränkt ist auf die Zweigniederlassung 007.

OW Mag. Harald Unterweger, geb. 07.10.1977
246 vertritt seit 01.01.2015 gemeinsam mit einem Vorstandsmitglied oder einer/einem weiteren Prokuristin/Prokuristen
wobei die Vertretungsbefugnis beschränkt ist auf die Zweigniederlassung 009.

OX Dipl.-Ing. Bernd Schöllhammer, geb. 20.03.1971
251 vertritt seit 10.07.2015 gemeinsam mit einem weiteren Vorstandsmitglied oder einer/einem Prokuristin/Prokuristen

OY Werner Neubauer, geb. 08.03.1967
247 vertritt seit 01.01.2015 gemeinsam mit einem Vorstandsmitglied oder einem weiteren Prokuristen
wobei die Vertretungsbefugnis beschränkt ist auf die Hauptniederlassung.

OZ Christian Deckert, geb. 11.12.1970
248 vertritt seit 23.03.2015 gemeinsam mit einem Vorstandsmitglied oder einer/einem weiteren Prokuristin/Prokuristen
wobei die Vertretungsbefugnis beschränkt ist auf die Hauptniederlassung.

PA Dipl.-Ing. Martin Sotek, geb. 18.05.1974
248 vertritt seit 23.03.2015 gemeinsam mit einem Vorstandsmitglied oder einer/einem weiteren Prokuristin/Prokuristen
wobei die Vertretungsbefugnis beschränkt ist auf die Hauptniederlassung.

PC Robert Fritz, geb. 30.05.1966
252 vertritt seit 07.09.2015 gemeinsam mit einem Vorstandsmitglied oder einer/einem weiteren Prokuristin/Prokuristen
wobei die Vertretungsbefugnis beschränkt ist auf die Hauptniederlassung.

PD Dr. Stefan Weiss, MBA, geb. 02.03.1973
254 vertritt seit 15.09.2015 gemeinsam mit einem Vorstandsmitglied oder einer/einem weiteren Prokuristin/Prokuristen
wobei die Vertretungsbefugnis beschränkt ist auf die Hauptniederlassung.

PE Jörg Wellmeyer, geb. 01.07.1968
255 vertritt seit 01.10.2015 gemeinsam mit einem Vorstandsmitglied oder einer/einem weiteren Prokuristin/Prokuristen

PF Peter Heinz Tropper, geb. 26.02.1970
259 vertritt seit 01.01.2016 gemeinsam mit einem Vorstandsmitglied oder einer/einem weiteren Prokuristin/Prokuristen
wobei die Vertretungsbefugnis beschränkt ist auf die Hauptniederlassung.

PG 259 Günther Hartweger, geb. 23.05.1967
vertritt seit 01.01.2016 gemeinsam mit
einem Vorstandsmitglied oder einer/einem weiteren
Prokuristin/Prokuristen
wobei die Vertretungsbefugnis beschränkt ist auf
die Hauptniederlassung.

PH 259 David Grottendieck, geb. 09.01.1971
vertritt seit 15.02.2016 gemeinsam mit
einem Vorstandsmitglied oder einer/einem weiteren
Prokuristin/Prokuristen

PI 259 Mag. Alfred Altersberger, geb. 18.06.1962
vertritt seit 15.02.2016 gemeinsam mit
einem Vorstandsmitglied oder einer/einem weiteren
Prokuristin/Prokuristen

PJ 261 Ing. Markus Pfeifer, geb. 27.04.1975
vertritt seit 20.04.2016 gemeinsam mit
einem Vorstandsmitglied oder einer/einem weiteren
Prokuristin/Prokuristen
wobei die Vertretungsbefugnis beschränkt ist auf
die Zweigniederlassung 002.

PK 263 Ing. Jörg Braun, geb. 09.10.1967
vertritt seit 01.07.2016 gemeinsam mit
einem Vorstandsmitglied oder einer/einem weiteren
Prokuristin/Prokuristen
wobei die Vertretungsbefugnis beschränkt ist auf
die Zweigniederlassung 009.

PL 263 Dipl.-Ing. (FH) Mario Hameseder, geb. 27.06.1979
vertritt seit 11.07.2016 gemeinsam mit
einem Vorstandsmitglied oder einer/einem weiteren
Prokuristin/Prokuristen
wobei die Vertretungsbefugnis beschränkt ist auf
die Zweigniederlassung 006 und 007.

PM 268 Norbert Rossak, geb. 15.02.1958
vertritt seit 15.12.2016 gemeinsam mit
einem Vorstandsmitglied oder einer/einem weiteren
Prokuristin/Prokuristen
wobei die Vertretungsbefugnis beschränkt ist auf
die Hauptniederlassung.

PN 269 Thomas Hohwieler, geb. 07.11.1965
vertritt seit 15.12.2016 gemeinsam mit
einem Vorstandsmitglied oder einer/einem
weiteren Prokuristin/Prokuristen

PO 270 Günter Königsmaier, geb. 04.07.1959
vertritt seit 01.01.2017 gemeinsam mit
einem Vorstandsmitglied oder einer/einem weiteren
Prokuristin/Prokuristen
wobei die Vertretungsbefugnis beschränkt ist auf
die Zweigniederlassung 003.

PP 270 Oliver Schupe, geb. 29.10.1966
vertritt seit 01.01.2017 gemeinsam mit
einem Vorstandsmitglied oder einer/einem weiteren
Prokuristin/Prokuristen

PQ 270 Dipl.-Ing. Hannes Gamsjäger, geb. 04.10.1969
vertritt seit 01.02.2017 gemeinsam mit
einem Vorstandsmitglied oder einer/einem weiteren
Prokuristin/Prokuristen
wobei die Vertretungsbefugnis beschränkt ist auf
die Hauptniederlassung.

PR 272 Frederik Kind, geb. 21.04.1981
vertritt seit 01.03.2017 gemeinsam mit
einem Vorstandsmitglied oder
einer/einem weiteren Prokuristin/Prokuristen
wobei die Vertretungsbefugnis beschränkt ist auf
die Hauptniederlassung.

PS 273 Peter OTTO, geb. 10.04.1968
vertritt seit 01.03.2017 gemeinsam mit
einem Vorstandsmitglied oder einer/einem weiteren
Prokuristin/Prokuristen

130

wobei die Vertretungsbefugnis beschränkt ist auf die Zweigniederlassung 006 und 007.

PT Rainer Bendekovits, geb. 22.09.1976
273 vertritt seit 01.03.2017 gemeinsam mit einem Vorstandsmitglied oder einer/einem weiteren Prokuristin/Prokuristen
wobei die Vertretungsbefugnis beschränkt ist auf die Zweigniederlassung 009.

PU Ing. Mag. Christian Messinger, geb. 17.09.1975
275 vertritt seit 18.04.2017 gemeinsam mit einem Vorstandsmitglied oder einer/einem weiteren Prokuristin/Prokuristen
wobei die Vertretungsbefugnis beschränkt ist auf die Hauptniederlassung.

PV Dipl.-Ing. Reinhard Bodner, geb. 31.08.1978
275 vertritt seit 18.04.2017 gemeinsam mit einem Vorstandsmitglied oder einer/einem weiteren Prokuristin/Prokuristen
wobei die Vertretungsbefugnis beschränkt ist auf die Hauptniederlassung.

PW Dipl.-Ing. (FH) Mario Theurl, geb. 10.08.1976
277 vertritt seit 01.06.2017 gemeinsam mit einem Vorstandsmitglied oder einer/einem weiteren Prokuristin/Prokuristen

PX Hannes Prassl, geb. 05.05.1982
277 vertritt seit 01.06.2017 gemeinsam mit einem Vorstandsmitglied oder einer/einem weiteren Prokuristin/Prokuristen
wobei die Vertretungsbefugnis beschränkt ist auf die Zweigniederlassung 001.

PY Werner Schwager, geb. 30.04.1980
277 vertritt seit 01.07.2017 gemeinsam mit einem Vorstandsmitglied oder einer/einem weiteren Prokuristin/Prokuristen
wobei die Vertretungsbefugnis beschränkt ist auf die Zweigniederlassung 010.

PZ Andreas Schrittesser, geb. 05.11.1970
277 vertritt seit 01.07.2017 gemeinsam mit einem Vorstandsmitglied oder einer/einem weiteren Prokuristin/Prokuristen
wobei die Vertretungsbefugnis beschränkt ist auf die Zweigniederlassung 003 und 008.

QA Kurt Zwinger, geb. 30.06.1970
277 vertritt seit 01.07.2017 gemeinsam mit einem Vorstandsmitglied oder einer/einem weiteren Prokuristin/Prokuristen
wobei die Vertretungsbefugnis beschränkt ist auf die Zweigniederlassung 003 und 008.

QB Georg Kappel, geb. 22.01.1978
277 vertritt seit 01.07.2017 gemeinsam mit einem Vorstandsmitglied oder einer/einem weiteren Prokuristin/Prokuristen
wobei die Vertretungsbefugnis beschränkt ist auf die Zweigniederlassung 006 und 007.

QC Andreas Eder, geb. 21.06.1977
277 vertritt seit 01.07.2017 gemeinsam mit einem Vorstandsmitglied oder einer/einem weiteren Prokuristin/Prokuristen
wobei die Vertretungsbefugnis beschränkt ist auf die Zweigniederlassung 008.

QD Yvonne Otrob, geb. 17.03.1990
279 vertritt seit 01.07.2017 gemeinsam mit einem Vorstandsmitglied oder einer/einem weiteren Prokuristin/Prokuristen
wobei die Vertretungsbefugnis beschränkt ist auf die Zweigniederlassung 009.

QE Ing. Roman Hornischer, geb. 31.12.1977
279 vertritt seit 01.07.2017 gemeinsam mit

STRABAG
STRABAG AG

einem Vorstandsmitglied oder einer/einem weiteren Prokuristin/Prokuristen
QF 281 Dipl.-Ing. Roman Velikovsky, geb. 15.05.1965
vertritt seit 01.07.2017 gemeinsam mit einem Vorstandsmitglied oder einer/einem weiteren Prokuristin/Prokuristen wobei die Vertretungsbefugnis beschränkt ist auf die Hauptniederlassung.

AUFSICHTSRATSMITGLIED
BY 109 Mag Hannes Truntschnig, geb. 22.07.1956
Mitglied
IX 194 Dipl Ing Siegfried Wanker, geb. 05.05.1968
Mitglied
JE 239 Mag Christian Harder, geb. 19.08.1968
Stellvertreter/in des/der Vorsitzenden
JI 182 Dipl.-Ing.Dr.techn. Peter Krammer, geb. 18.01.1966
Mitglied
NM 239 Dr. Thomas Birtel, geb. 03.06.1954
Vorsitzende/r

--- ZWEIGNIEDERLASSUNG 001 ---

1 früher Landesgericht für ZRS Graz HRB 1478
Ersteintragung am 29.04.1930

FIRMA
60 STRABAG AG
Zweigniederlassung Steiermark

ORT der ZWEIGNIEDERLASSUNG 001 in
1 politischer Gemeinde Graz

GESCHÄFTSANSCHRIFT
107 Maggstraße 40
8042 Graz

--- ZWEIGNIEDERLASSUNG 002 ---

1 früher Landesgericht Innsbruck HRB 6003
Ersteintragung am 27.09.1930

FIRMA
60 STRABAG AG
Zweigniederlassung Tirol/Vorarlberg

ORT der ZWEIGNIEDERLASSUNG 002 in
1 politischer Gemeinde Innsbruck

GESCHÄFTSANSCHRIFT
143 Sterzinger Straße 1
6020 Innsbruck

--- ZWEIGNIEDERLASSUNG 003 ---

1 früher Landesgericht Linz HRB 3500
Ersteintragung am 10.10.1930

FIRMA
60 STRABAG AG
Zweigniederlassung Oberösterreich

ORT der ZWEIGNIEDERLASSUNG 003 in
1 politischer Gemeinde Linz

VODOVOD I KANALIZACIJA ViK DANILOVGRAD
STRABAG STRABAG AG

GESCHÄFTSANSCHRIFT
54 Salzburger Straße 323
4021 Linz

--- ZWEIGNIEDERLASSUNG 006 ---

1 früher Landesgericht Eisenstadt HRB 2874
Ersteintragung am 10.07.1967

FIRMA
60 STRABAG AG
Zweigniederlassung Burgenland

ORT der ZWEIGNIEDERLASSUNG 006 in
1 politischer Gemeinde Markt Sankt Martin

GESCHÄFTSANSCHRIFT
265 Industriegelände 5
7341 Markt St. Martin

--- ZWEIGNIEDERLASSUNG 007 ---

1 früher Landesgericht St. Pölten HRB 664
Ersteintragung am 07.10.1976

FIRMA
60 STRABAG AG
Zweigniederlassung Niederösterreich

ORT der ZWEIGNIEDERLASSUNG 007 in
1 politischer Gemeinde Sankt Pölten

GESCHÄFTSANSCHRIFT
117 Ernst-Maerker-Straße 20
3100 St. Pölten

--- ZWEIGNIEDERLASSUNG 008 ---

1 früher Landesgericht Salzburg HRB 6593
Ersteintragung am 27.01.1971

FIRMA
60 STRABAG AG
Zweigniederlassung Salzburg

ORT der ZWEIGNIEDERLASSUNG 008 in
54 politischer Gemeinde Thalgau

GESCHÄFTSANSCHRIFT
151 Breitwies 32
5303 Thalgau

--- ZWEIGNIEDERLASSUNG 009 ---

1 früher Handelsgericht Wien HRB 17660
Ersteintragung am 14.05.1975

FIRMA
60 STRABAG AG
Zweigniederlassung Wien

ORT der ZWEIGNIEDERLASSUNG 009 in
1 politischer Gemeinde Wien

GESCHÄFTSANSCHRIFT
113 Donau-City-Straße 9
1220 Wien

D.O.O. VODOVOD I KANALIZACIJA VIK DANILOVGRAD

133

STRABAG
STRABAG AG

--- ZWEIGNIEDERLASSUNG 010 ---

1 früher Landesgericht Klagenfurt HRB 901
Ersteintragung am 29.08.1986

FIRMA
60 STRABAG AG
Zweigniederlassung Kärnten

ORT der ZWEIGNIEDERLASSUNG 010 in
1 Klagenfurt, politische Gemeinde Klagenfurt am Wörthersee

GESCHÄFTSANSCHRIFT
60 Boltzmannstraße 8
9020 Klagenfurt

--- PERSONEN ---

46 BS Mag. Gerold Laubreiter, geb. 30.11.1962
46 Koschatstr. 7/1/3
9020 Klagenfurt

54 BY Mag Hannes Truntschnig, geb. 22.07.1956
54 Ruthgasse 19
1190 Wien

62 CC Gerhard Biswanger, geb. 12.08.1957
275 Carl Appel Straße 9/25/2
1100 Wien

62 CP Ing Theodor Klais, geb. 09.04.1953
62 Johann-Hoffmann-Platz 7/10
1120 Wien

62 DC Ing Günther Rossbory, geb. 20.05.1953
62 Neubach 12
3382 Loosdorf

62 DI Franz Urban, geb. 20.01.1960
271 Grabengasse 24/Top 36
2500 Baden bei Wien

62 DL Mag Wolfgang Zechmeister, geb. 10.09.1962
62 Tolleterau 210
4710 St.Georgen bei Grieskirchen

62 DM Dipl-Ing Alfred Zeiler, geb. 28.08.1957
62 Eschengasse 1
4616 Weißkirchen an der Traun

62 DO Ing Manfred Aschaber, geb. 08.03.1958
62 Tinstingerstraße 61
4523 Neuzeug/Schwaming

62 DU Dipl-Ing Werner Kunz, geb. 20.11.1956
62 Hauptstraße 197
9210 Pörtschach am Wörther See

62 DX Ing Wolfgang Prohazka, geb. 19.07.1958
62 Schuppengasse 37a
1230 Wien

227 EK Ing. Bernhard Kowatsch, geb. 24.03.1968
227 Ebentaler Straße 54/31
9020 Klagenfurt am Wörthersee

62 EP Gerhard Wertl, geb. 21.08.1954
276 Banater Weg 4/7
9073 Klagenfurt-Viktring

62 EQ Stefan Altziebler, geb. 23.07.1957
62 Schönbühel 141
3392 Schönbühel an der Donau

62 FQ Dipl-Ing Manfred Lechner, geb. 16.07.1963
137 Länd 99
6233 Kramsach

62 FT Ing Wolfgang Dvorak, geb. 04.05.1958
62 Dr.-Max-Jung-Straße 56
2603 Matzendorf

VIK DANILOVGRAD

62	GA	Dipl-Ing Mario Rabitsch, geb. 03.03.1961
62		Josef-Schmutzergasse 12
		3412 Kierling
62	GG	Herbert Vanzo, geb. 16.06.1957
62		Lärchenweg 22
		9871 Seeboden
155	GV	Dipl Ing Johannes Kals, geb. 26.05.1961
90		Rittingerstraße 1
		4820 Bad Ischl
92	GX	Werner Kribernegg, geb. 19.04.1958
92		Feldweg 3
		8430 Tillmitsch
95	GZ	DI Harald Kratochwil, geb. 21.12.1959
95		Gauermanngasse 45
		3003 Gablitz
104	HC	Mag Ing Manfred Rosenauer, geb. 11.04.1957
104		Stefan-Fechter-Weg 3
		4020 Linz
112	HI	Walter Rützler, geb. 18.04.1958
112		Albrechtsberger Straße 25
		3382 Loosdorf/ Bez. Melk
112	HJ	Heinz Sumper, geb. 05.01.1961
112		Fischering 14
		9433 St. Andrä im Lavanttal
112	HL	Dipl-Ing Frank Fercher, geb. 29.04.1963
112		Leon.Bernstein Straße 4-6/5
		1220 Wien
112	HM	Walter Schmidt, geb. 20.01.1959
112		Heimgasse 3
		7161 St. Andrä bei Frauenkirchen
112	HN	Markus Engerth, geb. 01.06.1968
278		Birkengasse 13
		2123 Unterolberndorf
112	HO	Ing Manfred Trnka, geb. 13.02.1962
112		Doblhoffgasse 1 B
		2512 Tribuswinkel
112	HP	Ing Reinhard Kerschner, geb. 06.03.1966
112		Gassen 41
		3243 St. Leonhard am Forst
112	HR	Marina Humitsch, geb. 28.08.1958
273		Karolinengasse 22/5
		1040 Wien
116	HT	Mag Gerald Zangl, geb. 17.12.1967
116		L.-Bernstein-Straße 4-6
		1220 Wien
116	HU	Mag Herbert Krutina, geb. 14.07.1960
116		Auf der Hundskehle 8
		2384 Breitenfurt bei Wien
116	HV	Felix Koselleck, geb. 24.06.1963
116		Ostendstraße 47
		DEU-60314 Frankfurt
118	HW	Mag Günther Metzler, geb. 18.11.1966
118		Kaltenbrunngasse 11B
		8043 Graz-Kroisbach
118	HX	Johann König, geb. 12.12.1964
126		Schiedermayrweg 11
		4020 Linz
118	HY	Franz Redl, geb. 06.09.1964
118		Mozartgasse 22
		3003 Gablitz
121	IB	Dipl Ing Gerhard Streimel, geb. 23.07.1962
121		Am Saatzen 15
		2721 Bad Fischau
121	IC	Dipl Ing Martin Ullrich, geb. 09.02.1967
121		Wranitzkygasse 2/Haus 22
		1220 Wien
121	ID	Dipl Ing Dr Georg Kroyer, geb. 28.09.1967
121		Taglieberstraße 59

STRABAG
STRABAG AG

		1238 Wien
123	IG	Dipl Ing Thomas Wancata, geb. 19.07.1964
123		Peuckerstraße 36
		1220 Wien
123	II	Ing Günther Vojacek, geb. 14.07.1955
123		Laaben 197
		3053 Brand-Laaben
123	IL	Mag Franz Burgstaller, geb. 14.05.1966
180		Mitterberggasse 19/9
		1180 Wien
133	IS	Dipl Ing Dragan Pavelic, geb. 17.03.1956
133		Sinagasse 56/2/3
		1223 Wien
133	IU	Ing Heimo Oberwinkler, geb. 10.05.1963
133		Gartenstraße 2
		9800 Spittal an der Drau
134	IX	Dipl Ing Siegfried Wanker, geb. 05.05.1968
134		Aslangasse 2/5/6
		1190 Wien
135	JA	Ing Mag Ingo Sattlegger, geb. 04.08.1966
135		Gustav-Pick-Gasse 17/3
		1190 Wien
136	JC	Dipl Ing Wolfgang Dittrich, geb. 25.09.1967
136		Bergblickgasse 17
		2102 Bisamberg
137	JD	Maximilian Waltl, geb. 03.06.1959
137		Am Langen Zaun 53E
		4030 Linz
137	JE	Mag Christian Harder, geb. 19.08.1968
226		Ortenburgerstraße 27
		9800 Spittal an der Drau
137	JG	Ing Roland Pomarolli, geb. 16.06.1965
137		Klosteranger 4C
		6020 Innsbruck
137	JH	Ing Bernhard Prantl, geb. 16.04.1964
137		Brennwald 333
		6473 Wenns
141	JI	Dipl.-Ing.Dr.techn. Peter Krammer, geb. 18.01.1966
276		Langwiesgasse 24
		1140 Wien
142	JJ	Klaus Stefan Unger, geb. 04.09.1961
142		Fasangasse 473
		2013 Göllersdorf
144	JK	Ing Wolfgang Lehner, geb. 02.10.1962
197		Bernsteinstraße 15
		4225 Luftenberg an der Donau
146	JN	Mag Ing Stephan Jainöcker, geb. 29.09.1965
146		Salitergasse 74-80
		2380 Perchtoldsdorf
146	JQ	Gustav Schelberger, geb. 16.10.1956
146		Wachaustraße 57
		3121 Karlstetten
146	JT	Ing Gerold Alfred Pirker, geb. 15.11.1969
146		Reitberg 206b
		5301 Eugendorf
147	JX	Dipl Ing Michael Markart, geb. 24.07.1958
147		Fesslerstraße 36
		3100 St. Pölten
147	JY	Erwin Wurzer, geb. 18.05.1953
147		Viktoriaweg 42b
		9020 Klagenfurt
148	JZ	Dr James Lee Weiss, geb. 10.01.1968
147		Eckpergasse 5/1
		1180 Wien
147	KB	Dipl Ing Norbert Komma, geb. 22.06.1959
147		Hauptstraße 71
		2452 Mannersdorf am Leithagebirge
147	KD	DiplIng DiplIng Axel Otto Thomaschütz, geb. 05.08.1975

147		Ponauer Straße 10 9800 Spittal an der Drau
147 147	KE	Christian Matzner, geb. 04.04.1965 Haselbrunnerstraße 12/15 1230 Wien
147 147	KF	Ing Walter Burger, geb. 14.06.1967 Kremserstraße 54 3470 Kirchberg am Wagram
147 199	KI	DWT Dipl Ing MBA Günter Moser, geb. 31.10.1967 Gersthoferstraße 124 1180 Wien
155 155	KN	Mag Heribert Herzog, geb. 15.09.1964 Liesersiedlung 69 9800 Spittal an der Drau
155 168	KO	Christian Hauser, geb. 02.10.1962 Mühlenweg 22 5303 Thalgau-Egg
155 155	KP	Josef Rester, geb. 07.06.1960 Linzer Straße 40/4 3002 Purkersdorf
155 155	KQ	Ing Stefan Hanser, geb. 06.11.1966 Am Moosbach 6c 5310 Mondsee
156 156	KT	Gerald Kienast, geb. 24.09.1965 Losensteingasse 14 3382 Loosdorf/ Bez. Melk
156 156	KU	Ing Gerald Stadler, geb. 18.02.1965 Felberstraße 31 5730 Mittersill
156 156	KV	Ing Helmut Atzlinger, geb. 18.08.1964 Albinaweg 14 5411 Oberalm
181 156	KW	Ing Heinz Peter Fuchs, geb. 06.04.1965 Salaberg 53 3350 Haag (NÖ)
157 157	LA	Gerald Urban, geb. 22.02.1970 Donaustraße 109/10 2344 Maria Enzersdorf
157 157	LB	Raimund Desalla, geb. 03.01.1962 Fürth 207 5721 Piesendorf
157 157	LC	Ing Martin Kaftan, geb. 13.09.1970 Holzgasse 164 3400 Klosterneuburg
159 260	LJ	Alexander Ortenberg, geb. 28.04.1966 Ostrovitjanova Str. 53, Whg. 240 RUS-117342 Moskau
162 187	LL	Dipl Ing Thomas Höfner, geb. 02.01.1971 Bachgasse 14 2122 Münichsthal
162 162	LN	Mag Klaus-Dieter Pertl, geb. 25.04.1971 Erdmannsiedlung 11 9545 Radenthein
164 164	LR	Ing. Klaus Heller, geb. 21.09.1966 Buchenweg 10 4111 Walding
164 164	LT	Walter Schwab, geb. 03.07.1961 Munten 40 5205 Schleedorf
166 166	LY	Alois Neuherz, geb. 17.08.1963 Wilfersdorf 98 8200 Gleisdorf
167 166	MB	Ing Kurt Schandl, geb. 14.06.1956 Innstraße 15 6111 Volders
168 168	MC	Dr Kilian Schwarzacher, geb. 15.03.1958 Donau-City-Straße 9 1220 Wien

STRABAG
STRABAG AG

https://www.verrechnungsstelle.at/fb/at.gv.justiz.fbw/ds/auszug/auszug

175	MH	Ing Walter Bäuml, geb. 13.02.1973
175		Holzschlag 7
		2565 Holzschlag
176	MN	Martina Hofmann, geb. 07.01.1966
176		Anton-Hofmann-Gasse 2
		2511 Pfaffstätten/ Bez. Baden
183	MR	Ing Christoph Totschnig, geb. 08.03.1964
183		Goasserweg 11
		6170 Zirl
185	MT	Dipl Ing Gerhard Urschitz, geb. 26.05.1968
183		p.A. STRABAG AG
		Donau-City-Straße 9
		1220 Wien
183	MU	Klaus Kathmann, geb. 12.05.1964
183		p.A. STRABAB AG
		Donau-City-Straße 9
		1220 Wien
194	NB	Ing Robert Denk, geb. 22.07.1971
194		Raphael-Donner-Allee 16
		1220 Wien
195	NC	Gerhard Gruber, geb. 04.08.1957
195		Gutenhofnerstraße 6
		4300 St. Valentin/ NÖ
195	ND	Ing Robert Krakhofer, geb. 05.06.1967
195		Marienheimgasse 8/2/6
		2460 Bruck an der Leitha
195	NE	Dipl Ing Peter Reichenspurner, geb. 17.01.1958
195		Mozartstraße 16
		DEU-84453 Mühldorf
198	NH	Mag (FH) Markus Fischer, geb. 18.07.1976
198		Sensengasse 3/3/27
		1090 Wien
200	NJ	Ing Fritz Peter Eder, geb. 07.02.1959
200		Brunnengasse 24e
		2551 Enzesfeld-Lindabrunn
201	NK	Ing. Johann Pölzl, geb. 09.07.1970
201		Teigitschstraße 24
		8570 Voitsberg
201	NL	Stefan Olsacher, geb. 09.03.1957
201		Kaning, Dorfstraße 11
		9545 Radenthein
203	NM	Dr. Thomas Birtel, geb. 03.06.1954
229		Boverstraße 127
		DEU-45473 Mülheim an der Ruhr
230	NO	DI (FH) Robert Pavlik, geb. 20.12.1969
206		Teichhof 54
		8044 Graz-Mariatrost
207	NP	Ing Peter Goca, geb. 24.04.1968
207		Polgarstraße 30
		1220 Wien
208	NS	Dipl.-Ing. Hellfried Gugel, geb. 19.07.1966
208		Pfeilerhofstraße 30a
		8071 Hausmannstätten
210	NT	Dipl.-Ing. Dr. Herwig Schwarz, geb. 14.01.1973
210		Im Werd 3/5
		1020 Wien
214	NW	Dipl.-BW Marian Kloss, geb. 26.01.1957
214		Peter-Wolff-Straße 23
		DEU-50259 Pulheim
216	NZ	Ing. Ferdinand Mittermaier, geb. 03.12.1958
216		Unterwald 62a
		8563 Ligist
217	OA	Albert Waltl, geb. 30.03.1969
217		Lammersdorf 76
		9872 Millstatt (Ktn.)
217	OB	Edith Herz, geb. 25.12.1960
217		Columbusgasse 106/2/6
		1100 Wien

218	OC	Dipl.-Ing. FH Holger Specht, geb. 15.04.1958
218		Dr.-Otto-Bößner-Weg 6
		DEU-85521 Ottobrunn
220	OD	Dipl.-Ing. (FH) Christian Sadleder, geb. 17.01.1977
220		Blindenmarkt 42
		4600 Wels
220	OE	Dipl.-Ing. Walter Neurathner, geb. 20.06.1973
220		Ungargasse 52/2/19
		1030 Wien
224	OH	Dipl.-Ing. (FH) Edgar Schömig, geb. 01.10.1956
224		Hessenlauweg 14
		DEU-70569 Stuttgart
229	OI	Franz Aigner, geb. 28.03.1966
229		Mauternbach 71
		3512 Mautern (NÖ)
233	OJ	Karsten Richter, geb. 18.11.1959
233		Wallgarten 3
		DEU-38518 Gifhorn
233	OK	Dipl.-Ing. (FH) Dieter Wilken, geb. 22.02.1969
233		Höfergass 7a/Top 7
		1090 Wien
235	OM	Dipl.-Ing. Dirk Grüneberg, geb. 23.12.1965
235		Obergasse 30
		DEU-63225 Langen
235	ON	DDipl.-Ing. Simon Wild, geb. 17.08.1979
235		Erdbergstraße 34 Haus 1
		1030 Wien
236	OO	Manfred Schöppl, geb. 05.06.1969
236		Karling 146
		4081 Hartkirchen (OÖ)
236	OP	Ing. Robert Kallinger, geb. 07.02.1968
236		Plätzgasse 25
		2700 Wiener Neustadt
240	OQ	Jens Hoffmann, geb. 15.07.1976
240		Leopoldsgasse 9/Top 5
		1020 Wien
245	OR	Jürgen Raschendorfer, geb. 27.07.1972
245		Jägerhofstraße 11
		DEU-42119 Wuppertal
245	OS	Franz Weissinger, geb. 20.06.1960
245		Hamerlinggasse 13a
		3382 Loosdorf/ Bez. Melk
246	OT	Mag. Samir Ljaic, geb. 29.07.1980
246		Arbeitergasse 17/1
		2232 Deutsch Wagram
246	OV	Dipl.-Ing. Erwin Fahrnberger, geb. 04.04.1973
246		Gossam 65
		3644 Emmersdorf an der Donau
246	OW	Mag. Harald Unterweger, geb. 07.10.1977
246		Achauerstraße 8/2/33
		2333 Leopoldsdorf bei Wien
247	OX	Dipl.-Ing. Bernd Schöllhammer, geb. 20.03.1971
247		Wintergasse 48/9
		3002 Purkersdorf
247	OY	Werner Neubauer, geb. 08.03.1967
247		Eicherberg 61
		8234 Eichberg
248	OZ	Christian Deckert, geb. 11.12.1970
248		Jahrholzweg 12
		DEU-82284 Grafrath
248	PA	Dipl.-Ing. Martin Sotek, geb. 18.05.1974
248		Urselbrunnengasse 15/12
		1100 Wien
252	PC	Robert Fritz, geb. 30.05.1966
252		Am Rosenhügel 77
		2401 Fischamend
254	PD	Dr. Stefan Weiss, MBA, geb. 02.03.1973
254		Flamminggasse 51

STRABAG
STRABAG AG

https://www.verrechnungsstelle.at/fb/at.gv.justiz.fbw/ds/auszug/auszug

		2500 Baden bei Wien
255	PE	Jörg Wellmeyer, geb. 01.07.1968
255		Birnbaumweg 5
		DEU-65556 Limburg-Staffel
259	PF	Peter Heinz Tropper, geb. 26.02.1970
260		Felixgasse 57
		1130 Wien
259	PG	Günther Hartweger, geb. 23.05.1967
259		Hangstraße 23a
		9800 Spittal an der Drau
259	PH	David Grottendieck, geb. 09.01.1971
259		Wiesenweg 8
		DEU-83313 Siegsdorf
259	PI	Mag. Alfred Altersberger, geb. 18.06.1962
259		Lammersdorf 69
		9872 Millstatt (Ktn.)
261	PJ	Ing. Markus Pfeifer, geb. 27.04.1975
261		Rettlsteinerweg 23
		6112 Wattens
263	PK	Ing. Jörg Braun, geb. 09.10.1967
263		Mauthausener Straße 20 F12
		4221 Steyregg
263	PL	Dipl.-Ing. (FH) Mario Hameseder, geb. 27.06.1979
263		Otto-Glöckel-Straße 4/2
		3382 Loosdorf
268	PM	Norbert Rossak, geb. 15.02.1958
268		Kneippstraße 3
		4600 Wels
269	PN	Thomas Hohwieler, geb. 07.11.1965
269		Rötebuckweg 49
		DEU-79104 Freiburg
270	PO	Günter Königsmaier, geb. 04.07.1959
270		Corneliusgasse 10
		4020 Linz
270	PP	Oliver Schupe, geb. 29.10.1966
270		Stocksiepen 2B
		DEU-45133 Essen
270	PQ	Dipl.-Ing. Hannes Gamsjäger, geb. 04.10.1969
270		Gosau 153/2
		4824 Gosau
272	PR	Frederik Kind, geb. 21.04.1981
272		Silbergasse 22/8
		1190 Wien
273	PS	Peter OTTO, geb. 10.04.1968
273		Holzmarkt 26
		2560 Berndorf (NÖ)
273	PT	Rainer Bendekovits, geb. 22.09.1976
273		Günseck 21
		7435 Günseck
275	PU	Ing. Mag. Christian Messinger, geb. 17.09.1975
275		Brennleitenstraße 43-49/5
		2202 Hagenbrunn
275	PV	Dipl.-Ing. Reinhard Bodner, geb. 31.08.1978
275		Schlossbergstraße 19a
		2114 Großrußbach
277	PW	Dipl.-Ing. (FH) Mario Theurl, geb. 10.08.1976
277		Penzendorf 12
		9911 Assling
277	PX	Hannes Prassl, geb. 05.05.1982
277		Erzherzog Johann-Weg 3
		8642 St. Lorenzen im Mürztal
277	PY	Werner Schwager, geb. 30.04.1980
277		Trattengasse 7/2/14
		9500 Villach
277	PZ	Andreas Schrittesser, geb. 05.11.1970
277		Wienerstraße 2
		5202 Neumarkt am Wallersee
277	QA	Kurt Zwinger, geb. 30.06.1970

https://www.verrechnungsstelle.at/fb/at.gv.justiz.fbw/ds/auszug/auszug

STRABAG
STRABAG AG

22.08.2017

277 Sandtal 30
5144 Handenberg
277 QB Georg Kappel, geb. 22.01.1978
277 Redlschlag 143
7434 Bernstein (Bgld.)
277 QC Andreas Eder, geb. 21.06.1977
277 Dorfstraße 49
5733 Bramberg
279 QD Yvonne Otrob, geb. 17.03.1990
279 Siegfriedgasse 28/13/8
1210 Wien
279 QE Ing. Roman Hornischer, geb. 31.12.1977
279 Wienerstraße 1/RH9
2483 Münchendorf
281 QF Dipl.-Ing. Roman Velikovsky, geb. 15.05.1965
281 Röntgengasse 63
1170 Wien

---------- VOLLZUGSÜBERSICHT ----------

Handelsgericht Wien

1 Ersterfassung abgeschlossen am 18.11.1993 Geschäftsfall 920 Fr 779/93 b
Ersterfassung gem. Art. XXIII Abs. 4 FBG
39 eingetragen am 01.07.1999 Geschäftsfall 72 Fr 7400/99 g
Antrag auf Änderung eingelangt am 21.06.1999
43 eingetragen am 02.09.1999 Geschäftsfall 72 Fr 8914/99 h
Antrag auf Änderung eingelangt am 20.07.1999
46 eingetragen am 21.09.1999 Geschäftsfall 72 Fr 11458/99 z
Antrag auf Änderung eingelangt am 09.09.1999

Landesgericht Klagenfurt

54 eingetragen am 10.08.2000 Geschäftsfall 5 Fr 4528/00 s
Antrag auf Änderung eingelangt am 31.07.2000

Landesgericht Linz

56 eingetragen am 23.08.2000 Geschäftsfall 34 Fr 2924/00 y
Antrag auf Änderung eingelangt am 17.08.2000

Landesgericht Klagenfurt

57 eingetragen am 26.08.2000 Geschäftsfall 5 Fr 5102/00 i
Zuständigkeitsänderung gem. § 120 (7) JN
58 eingetragen am 01.09.2000 Geschäftsfall 5 Fr 5103/00 k
Antrag auf Änderung eingelangt am 25.08.2000
59 eingetragen am 02.09.2000 Geschäftsfall 5 Fr 5105/00 p
Antrag auf Änderung eingelangt am 25.08.2000
60 eingetragen am 05.09.2000 Geschäftsfall 5 Fr 5106/00 s
Antrag auf Änderung eingelangt am 25.08.2000
62 eingetragen am 21.09.2000 Geschäftsfall 5 Fr 5552/00 x
Antrag auf Änderung eingelangt am 12.09.2000
64 eingetragen am 26.09.2000 Geschäftsfall 5 Fr 5791/00 y
Antrag auf Änderung eingelangt am 21.09.2000
65 eingetragen am 13.10.2000 Geschäftsfall 5 Fr 6487/00 x
amtswegige Berichtigung
66 eingetragen am 17.10.2000 Geschäftsfall 5 Fr 5805/00 v
Antrag auf Änderung eingelangt am 21.09.2000
67 eingetragen am 17.10.2000 Geschäftsfall 5 Fr 6877/00 w
Antrag auf Änderung eingelangt am 21.09.2000
68 eingetragen am 18.10.2000 Geschäftsfall 5 Fr 5913/00 b
Antrag auf Änderung eingelangt am 21.09.2000
69 eingetragen am 19.10.2000 Geschäftsfall 5 Fr 5921/00 p
Antrag auf Änderung eingelangt am 21.09.2000
70 eingetragen am 20.10.2000 Geschäftsfall 5 Fr 6[illegible]

STRABAG
STRABAG AG

https://www.verrechnungsstelle.at/fb/at.gv.justiz.fbw/de/auszug/auszug

Antrag auf Änderung eingelangt am 21.09.2000 71 eingetragen am 21.10.2000	Geschäftsfall	5 Fr	6494/00 g
Antrag auf Änderung eingelangt am 21.09.2000 72 eingetragen am 24.10.2000	Geschäftsfall	5 Fr	6876/00 v
Antrag auf Änderung eingelangt am 26.09.2000 76 eingetragen am 04.04.2001	Geschäftsfall	5 Fr	2366/01 w
Berichtigung/Herstellung d. Eintragungen 78 eingetragen am 25.07.2001	Geschäftsfall	5 Fr	5307/01 w
Einreichung Jahresabschluss eingelangt am 19.07.2001 79 eingetragen am 21.08.2001	Geschäftsfall	5 Fr	5310/01 z
Antrag auf Änderung eingelangt am 19.07.2001 81 eingetragen am 13.10.2001	Geschäftsfall	5 Fr	7646/01 i
Antrag auf Änderung eingelangt am 27.09.2001 82 eingetragen am 16.10.2001	Geschäftsfall	5 Fr	7651/01 t
Antrag auf Änderung eingelangt am 27.09.2001 83 eingetragen am 18.10.2001	Geschäftsfall	5 Fr	8124/01 m
Antrag auf Änderung eingelangt am 27.09.2001 85 eingetragen am 14.11.2001	Geschäftsfall	5 Fr	8671/01 t
Antrag auf Änderung eingelangt am 05.11.2001 90 eingetragen am 28.03.2002	Geschäftsfall	5 Fr	1991/02 b
Antrag auf Änderung eingelangt am 25.03.2002 92 eingetragen am 25.04.2002	Geschäftsfall	5 Fr	2616/02 x
Antrag auf Änderung eingelangt am 23.04.2002 95 eingetragen am 04.07.2002	Geschäftsfall	5 Fr	4433/02 v
Antrag auf Änderung eingelangt am 02.07.2002 104 eingetragen am 28.01.2003	Geschäftsfall	5 Fr	543/03 g
Antrag auf Änderung eingelangt am 23.01.2003 107 eingetragen am 05.03.2003	Geschäftsfall	5 Fr	1468/03 t
Antrag auf Änderung eingelangt am 28.02.2003 109 eingetragen am 13.05.2003	Geschäftsfall	5 Fr	3693/03 p
Antrag auf Änderung eingelangt am 08.05.2003 112 eingetragen am 25.07.2003	Geschäftsfall	5 Fr	5739/03 y
Antrag auf Änderung eingelangt am 22.07.2003 113 eingetragen am 07.08.2003	Geschäftsfall	5 Fr	6075/03 t
Antrag auf Änderung eingelangt am 05.08.2003 116 eingetragen am 30.09.2003	Geschäftsfall	5 Fr	7412/03 h
Antrag auf Änderung eingelangt am 25.09.2003 117 eingetragen am 29.10.2003	Geschäftsfall	5 Fr	8545/03 z
Antrag auf Änderung eingelangt am 27.10.2003 118 eingetragen am 06.12.2003	Geschäftsfall	5 Fr	9765/03 v
Antrag auf Änderung eingelangt am 04.12.2003 121 eingetragen am 04.02.2004	Geschäftsfall	5 Fr	665/04 w
Antrag auf Änderung eingelangt am 02.02.2004 123 eingetragen am 02.04.2004	Geschäftsfall	5 Fr	2700/04 m
Antrag auf Änderung eingelangt am 31.03.2004 126 eingetragen am 10.08.2004	Geschäftsfall	5 Fr	6486/04 f
Antrag auf Änderung eingelangt am 06.08.2004 127 eingetragen am 26.08.2004	Geschäftsfall	5 Fr	6828/04 h
Antrag auf Änderung eingelangt am 24.08.2004 132 eingetragen am 13.01.2005	Geschäftsfall	5 Fr	10445/04 b
Antrag auf Änderung eingelangt am 24.12.2004 133 eingetragen am 05.02.2005	Geschäftsfall	5 Fr	891/05 k
Antrag auf Änderung eingelangt am 03.02.2005 134 eingetragen am 23.02.2005	Geschäftsfall	5 Fr	1520/05 k
Antrag auf Änderung eingelangt am 21.02.2005 135 eingetragen am 19.03.2005	Geschäftsfall	5 Fr	2879/05 i
Antrag auf Änderung eingelangt am 17.03.2005 136 eingetragen am 12.04.2005	Geschäftsfall	5 Fr	3774/05 a
Antrag auf Änderung eingelangt am 08.04.2005 137 eingetragen am 31.05.2005	Geschäftsfall	5 Fr	5291/05 g
Antrag auf Änderung eingelangt am 25.05.2005 138 eingetragen am 16.07.2005	Geschäftsfall	5 Fr	6581/05 d
Einreichung Jahresabschluss eingelangt am 13.07.2005 141 eingetragen am 28.07.2005	Geschäftsfall	5 Fr	6867/05 z
amtswegige Berichtigung 142 eingetragen am 07.09.2005	Geschäftsfall	5 Fr	7786/05 a
Antrag auf Änderung eingelangt am 02.09.2005 143 eingetragen am 01.11.2005	Geschäftsfall	5 Fr	9549/05 v

Antrag auf Änderung eingelangt am 27.10.2005
144 eingetragen am 01.02.2006 Geschäftsfall 5 Fr 645/06 h
Antrag auf Änderung eingelangt am 30.01.2006
146 eingetragen am 28.04.2006 Geschäftsfall 5 Fr 4313/06 b
Antrag auf Änderung eingelangt am 24.04.2006
147 eingetragen am 01.07.2006 Geschäftsfall 5 Fr 5780/06 i
Antrag auf Änderung eingelangt am 16.06.2006
148 eingetragen am 05.07.2006 Geschäftsfall 5 Fr 6230/06 x
amtswegige Berichtigung
149 eingetragen am 21.07.2006 Geschäftsfall 5 Fr 6721/06 v
Antrag auf Änderung eingelangt am 19.07.2006
151 eingetragen am 25.07.2006 Geschäftsfall 5 Fr 6868/06 i
amtswegige Berichtigung
154 eingetragen am 16.01.2007 Geschäftsfall 5 Fr 11705/06 y
Antrag auf Änderung eingelangt am 27.12.2006
155 eingetragen am 15.02.2007 Geschäftsfall 5 Fr 1122/07 v
Antrag auf Änderung eingelangt am 05.02.2007
156 eingetragen am 23.03.2007 Geschäftsfall 5 Fr 3215/07 x
Antrag auf Änderung eingelangt am 21.03.2007
157 eingetragen am 04.07.2007 Geschäftsfall 5 Fr 6300/07 h
Antrag auf Änderung eingelangt am 02.07.2007
159 eingetragen am 09.10.2007 Geschäftsfall 5 Fr 9416/07 s
Antrag auf Änderung eingelangt am 04.10.2007
162 eingetragen am 16.11.2007 Geschäftsfall 5 Fr 10716/07 b
Antrag auf Änderung eingelangt am 14.11.2007
164 eingetragen am 15.02.2008 Geschäftsfall 5 Fr 1795/08 t
Antrag auf Änderung eingelangt am 11.02.2008
166 eingetragen am 18.04.2008 Geschäftsfall 5 Fr 4821/08 t
Antrag auf Änderung eingelangt am 16.04.2008
167 eingetragen am 22.04.2008 Geschäftsfall 5 Fr 4936/08 k
amtswegige Berichtigung
168 eingetragen am 16.05.2008 Geschäftsfall 5 Fr 5662/08 d
Antrag auf Änderung eingelangt am 13.05.2008
175 eingetragen am 19.03.2009 Geschäftsfall 5 Fr 3093/09 i
Antrag auf Änderung eingelangt am 17.03.2009
176 eingetragen am 16.04.2009 Geschäftsfall 5 Fr 4600/09 a
Antrag auf Änderung eingelangt am 10.04.2009
180 eingetragen am 09.10.2009 Geschäftsfall 5 Fr 11062/09 d
Antrag auf Änderung eingelangt am 06.10.2009
181 eingetragen am 09.10.2009 Geschäftsfall 5 Fr 11063/09 f
Antrag auf Änderung eingelangt am 06.10.2009
182 eingetragen am 26.01.2010 Geschäftsfall 5 Fr 588/10 i
Antrag auf Änderung eingelangt am 18.01.2010
183 eingetragen am 19.03.2010 Geschäftsfall 5 Fr 3003/10 k
Antrag auf Änderung eingelangt am 17.03.2010
185 eingetragen am 17.04.2010 Geschäftsfall 5 Fr 4818/10 f
Antrag auf Änderung eingelangt am 14.04.2010
187 eingetragen am 28.05.2010 Geschäftsfall 5 Fr 6285/10 m
Antrag auf Änderung eingelangt am 25.05.2010
194 eingetragen am 08.02.2011 Geschäftsfall 67 Fr 27/11 z
Antrag auf Änderung eingelangt am 04.02.2011
195 eingetragen am 25.03.2011 Geschäftsfall 67 Fr 342/11 m
Antrag auf Änderung eingelangt am 18.03.2011
197 eingetragen am 15.04.2011 Geschäftsfall 67 Fr 588/11 z
Antrag auf Änderung eingelangt am 13.04.2011
198 eingetragen am 13.05.2011 Geschäftsfall 67 Fr 1273/11 g
Antrag auf Änderung eingelangt am 11.05.2011
199 eingetragen am 16.06.2011 Geschäftsfall 67 Fr 1751/11 i
Antrag auf Änderung eingelangt am 14.06.2011
200 eingetragen am 01.07.2011 Geschäftsfall 67 Fr 1853/11 i
Antrag auf Änderung eingelangt am 24.06.2011
201 eingetragen am 02.08.2011 Geschäftsfall 67 Fr 2012/11 v
Antrag auf Änderung eingelangt am 27.07.2011
203 eingetragen am 06.08.2011 Geschäftsfall 67 Fr 2045/11 t
Elektronische Einreichung Jahresabschluss eingelangt am 01.08.2011
206 eingetragen am 11.10.2011 Geschäftsfall 67 Fr 2618/11 i
Antrag auf Änderung eingelangt am 04.10.2011
207 eingetragen am 16.11.2011 Geschäftsfall 67 Fr 3069/11 y

143

STRABAG
STRABAG

Antrag auf Änderung eingelangt am 15.11.2011
208 eingetragen am 24.01.2012 Geschäftsfall 67 Fr 43/12 g
Antrag auf Änderung eingelangt am 17.01.2012
210 eingetragen am 25.02.2012 Geschäftsfall 67 Fr 162/12 g
Antrag auf Änderung eingelangt am 23.02.2012
212 eingetragen am 15.08.2012 Geschäftsfall 67 Fr 1411/12 v
Antrag auf Änderung eingelangt am 30.07.2012
214 eingetragen am 31.10.2012 Geschäftsfall 67 Fr 1987/12 s
Antrag auf Änderung eingelangt am 24.10.2012
216 eingetragen am 21.12.2012 Geschäftsfall 67 Fr 2392/12 k
Antrag auf Änderung eingelangt am 19.12.2012
217 eingetragen am 08.01.2013 Geschäftsfall 67 Fr 2429/12 s
Antrag auf Änderung eingelangt am 28.12.2012
218 eingetragen am 22.02.2013 Geschäftsfall 67 Fr 151/13 z
Antrag auf Änderung eingelangt am 20.02.2013
219 eingetragen am 12.03.2013 Geschäftsfall 67 Fr 225/13 h
Antrag auf Änderung eingelangt am 08.03.2013
220 eingetragen am 04.04.2013 Geschäftsfall 67 Fr 290/13 d
Antrag auf Änderung eingelangt am 28.03.2013
223 eingetragen am 28.06.2013 Geschäftsfall 67 Fr 606/13 v
Antrag auf Änderung eingelangt am 26.06.2013
224 eingetragen am 06.07.2013 Geschäftsfall 67 Fr 630/13 d
Antrag auf Änderung eingelangt am 02.07.2013
225 eingetragen am 17.07.2013 Geschäftsfall 67 Fr 681/13 d
amtswegige Berichtigung
226 eingetragen am 20.07.2013 Geschäftsfall 67 Fr 688/13 p
Elektronische Einreichung Jahresabschluss und Antrag auf Änderung
eingelangt am 18.07.2013
227 eingetragen am 31.07.2013 Geschäftsfall 67 Fr 721/13 m
Antrag auf Änderung eingelangt am 25.07.2013
229 eingetragen am 01.10.2013 Geschäftsfall 67 Fr 1199/13 s
Antrag auf Änderung eingelangt am 26.09.2013
230 eingetragen am 04.10.2013 Geschäftsfall 67 Fr 1302/13 t
amtswegige Berichtigung
233 eingetragen am 21.01.2014 Geschäftsfall 67 Fr 46/14 d
Antrag auf Änderung eingelangt am 17.01.2014
235 eingetragen am 25.03.2014 Geschäftsfall 67 Fr 291/14 p
Antrag auf Änderung eingelangt am 21.03.2014
236 eingetragen am 15.04.2014 Geschäftsfall 67 Fr 388/14 g
Antrag auf Änderung eingelangt am 10.04.2014
237 eingetragen am 22.05.2014 Geschäftsfall 67 Fr 505/14 d
Antrag auf Änderung eingelangt am 16.05.2014
239 eingetragen am 05.09.2014 Geschäftsfall 67 Fr 946/14 b
Antrag auf Änderung eingelangt am 03.09.2014
240 eingetragen am 06.09.2014 Geschäftsfall 67 Fr 948/14 f
Antrag auf Änderung eingelangt am 04.09.2014
241 eingetragen am 08.11.2014 Geschäftsfall 67 Fr 1523/14 a
Antrag auf Änderung eingelangt am 04.11.2014
243 eingetragen am 20.11.2014 Geschäftsfall 67 Fr 1542/14 d
amtswegige Berichtigung
245 eingetragen am 27.01.2015 Geschäftsfall 67 Fr 63/15 m
Antrag auf Änderung eingelangt am 26.01.2015
246 eingetragen am 12.03.2015 Geschäftsfall 67 Fr 173/15 z
Antrag auf Änderung eingelangt am 27.02.2015
247 eingetragen am 27.03.2015 Geschäftsfall 67 Fr 229/15 g
Antrag auf Änderung eingelangt am 20.03.2015
248 eingetragen am 18.04.2015 Geschäftsfall 67 Fr 288/15 v
Antrag auf Änderung eingelangt am 13.04.2015
251 eingetragen am 07.08.2015 Geschäftsfall 67 Fr 715/15 x
Antrag auf Änderung eingelangt am 04.08.2015
252 eingetragen am 24.09.2015 Geschäftsfall 67 Fr 1056/15 y
Antrag auf Änderung eingelangt am 21.09.2015
254 eingetragen am 02.10.2015 Geschäftsfall 67 Fr 1397/15 z
Antrag auf Änderung eingelangt am 30.09.2015
255 eingetragen am 23.10.2015 Geschäftsfall 67 Fr 1534/15 a
Antrag auf Änderung eingelangt am 20.10.2015
259 eingetragen am 09.03.2016 Geschäftsfall 67 Fr 177/16 p
Antrag auf Änderung eingelangt am 07.03.2016

STRABAG
STRABAG AG

260 eingetragen am 26.04.2016 Geschäftsfall 67 Fr 356/16 b
Antrag auf Änderung eingelangt am 25.04.2016
261 eingetragen am 02.06.2016 Geschäftsfall 67 Fr 478/16 g
Antrag auf Änderung eingelangt am 31.05.2016
263 eingetragen am 27.07.2016 Geschäftsfall 67 Fr 713/16 b
Antrag auf Änderung eingelangt am 25.07.2016
265 eingetragen am 15.09.2016 Geschäftsfall 67 Fr 943/16 s
Antrag auf Änderung eingelangt am 13.09.2016
267 eingetragen am 16.12.2016 Geschäftsfall 67 Fr 1620/16 x
Antrag auf Änderung eingelangt am 13.12.2016
268 eingetragen am 04.01.2017 Geschäftsfall 67 Fr 1700/16 d
Antrag auf Änderung eingelangt am 27.12.2016
269 eingetragen am 24.01.2017 Geschäftsfall 67 Fr 21/17 v
Antrag auf Änderung eingelangt am 18.01.2017
270 eingetragen am 10.02.2017 Geschäftsfall 67 Fr 79/17 d
Antrag auf Änderung eingelangt am 07.02.2017
271 eingetragen am 04.03.2017 Geschäftsfall 67 Fr 130/17 d
Antrag auf Änderung eingelangt am 02.03.2017
272 eingetragen am 09.03.2017 Geschäftsfall 67 Fr 146/17 b
Antrag auf Änderung eingelangt am 07.03.2017
273 eingetragen am 30.03.2017 Geschäftsfall 67 Fr 223/17 s
Antrag auf Änderung eingelangt am 28.03.2017
274 eingetragen am 04.04.2017 Geschäftsfall 67 Fr 232/17 d
Antrag auf Änderung eingelangt am 30.03.2017
275 eingetragen am 04.05.2017 Geschäftsfall 67 Fr 327/17 v
Antrag auf Änderung eingelangt am 28.04.2017
276 eingetragen am 10.06.2017 Geschäftsfall 67 Fr 433/17 z
Antrag auf Änderung eingelangt am 08.06.2017
277 eingetragen am 01.07.2017 Geschäftsfall 67 Fr 491/17 i
Antrag auf Änderung eingelangt am 27.06.2017
278 eingetragen am 04.07.2017 Geschäftsfall 67 Fr 541/17 h
amtswegige Berichtigung
279 eingetragen am 14.07.2017 Geschäftsfall 67 Fr 595/17 m
Antrag auf Änderung eingelangt am 12.07.2017
280 eingetragen am 08.08.2017 Geschäftsfall 67 Fr 590/17 f
Elektronische Einreichung Jahresabschluss eingelangt am 11.07.2017
281 eingetragen am 09.08.2017 Geschäftsfall 67 Fr 673/17 b
Antrag auf Änderung eingelangt am 02.08.2017

---------- INFORMATION DER ÖSTERREICHISCHEN NATIONALBANK ----------

zum 22.08.2017 gültige Identnummer: 42161
Zweigniederlassung 001: 908258
Zweigniederlassung 002: 1136810
Zweigniederlassung 003: 985627
Zweigniederlassung 006: 179949
Zweigniederlassung 007: 844691
Zweigniederlassung 008: 1055330
Zweigniederlassung 009: 653870
Zweigniederlassung 010: 209295

erstellt über Verrechnungsstelle ÖGIZIN ********** HA021
Gerichtsgebühr: EUR 3.53 **** 22.08.2017 09:40:04,443 38622595 ** ZEILEN: 1464

Dr. Elisabeth NEUWIRTH ÖFFENTLICHE NOTARIN Wien - Neubau

öffentl. Notarin
als Gerichtskommissär

STRABAG
STRABAG AG

145

BEGLAUBIGTE FOTOKOPIE

SATZUNG

in der Fassung des Beschlusses der Hauptversammlung vom 02.07.2012

I. Allgemeine Bestimmungen

§ 1

1) Die Gesellschaft führt die Firma „STRABAG AG".

2) Der Sitz der Gesellschaft ist in Spittal an der Drau.

3) Die Dauer der Gesellschaft ist nicht auf eine bestimmte Zeit beschränkt.

§ 2

1) Gegenstand des Unternehmens ist

a) die Planung und Ausführung von Bauten aller Art, allein oder in Arbeitsgemeinschaft mit anderen Bauunternehmen,
b) der Erwerb aller einschlägigen gewerblichen Schutzrechte und Verfahren,
c) der Handel mit Waren aller Art, insbesondere der Handel mit Baustoffen,
d) der Betrieb von Lieferbetonwerken, Steinbrüchen, Sand- und Kiesgruben,
e) die Vermietung von Baumaschinen und Geräten,
f) die Verwertung von Grundstücken und grundstücksgleichen Rechten
g) die Dienstleistung in der automatischen Datenverarbeitung und Informationstechnik, Systemanalyse, Programmierung und Organisation,
h) die Ausübung des Gewerbes des Versicherungsmaklers,
i) die Erwerbung, Verwaltung und Verwertung von Beteiligungen aller Art, insbesondere an gleichartigen und ähnlichen Unternehmungen im In- und Ausland,
j) der Maschinenbau, Industrieanlagenbau, Rohrleitungsbau und verwandte Tätigkeiten,
k) die Errichtung, der Kauf und Verkauf von Ein- und Mehrfamilienhäusern und die Schaffung von Wohnungseigentum,
l) der Betrieb des Immobilienmakler- beziehungsweise Immobilienverwaltungsgewerbes,
m) die Ausübung des Pflasterergewerbes,
n) die Ausübung des Bauträgergewerbes,
o) Sonderabfallsammler und Verwerter,
p) die Überlassung von Arbeitskräften,
q) das Gewerbe der Betonwarenerzeuger, der Schwarzdecker, der Wärme-, Kälte-, Schall- und Branddämmung, der Abdichtung gegen Feuchtigkeit und Druckwasser, der Asphaltierer, der Steinholzleger und Estrichhersteller und des Splittrecyclings,
r) der Betrieb von Sprengungsunternehmen,
s) das Zimmermeister-, Brunnenmeister- und Steinmetzmeistergewerbe,
t) das Gewerbe der Gas- und Wasserleitungsinstallation,
u) der Betrieb von technischen Büros und Prüflabors,
v) die Güterbeförderung mit Kraftfahrzeugen,
w) die Werbeagentur.

d.o.o. VODOVOD I KANALIZACIJA VIK DANILOVGRAD

STRABAG
STRABAG AG

2) Die Gesellschaft ist zu allen Geschäften und Maßnahmen berechtigt, die zur Erreichung des Gesellschaftszwecks notwendig oder nützlich erscheinen, insbesondere zum Erwerb von Liegenschaften, zur Errichtung von Zweigniederlassungen und Tochtergesellschaften im In- und Ausland sowie zur Beteiligung an anderen Unternehmen.

§ 3

Veröffentlichungen der Gesellschaft erfolgen, soweit aufgrund des Aktiengesetzes zwingend erforderlich, im Amtsblatt der „Wiener Zeitung". Im Übrigen erfolgen Veröffentlichungen der Gesellschaft entsprechend den jeweils anzuwendenden Rechtsvorschriften.

II. Grundkaptial und Aktien

§ 4

1) Das Grundkapital der Gesellschaft beträgt € 12.000.000,-- (zwölf Millionen Euro).

2) Es ist zerlegt in 1.500.000 (eine Million fünfhunderttausend) Stückaktien.

3) Ein Teil in Höhe von € 6.358.872,99 (sechs Millionen dreihundertachtundfünfzigtausendachthundertzweiundsiebzig Euro und neunundneunzig Cent) der im Jahresabschluß der „STUAG Bau-Aktiengesellschaft", nunmehr „STRABAG AG", Spittal an der Drau, FN 61689 w, zum 31.12.1994 (einunddreißigsten Dezember neunzehnhundertvierundneunzig) ausgewiesenen freien Gewinnrücklagen wird in eine gebundene Rücklage eingestellt. Diese satzungsmäßig gebundene Rücklage darf nur zur Kapitalerhöhung aus Gesellschaftsmitteln verwendet oder zum Ausgleich eines ansonsten auszuweisenden Bilanzverlustes aufgelöst, keinesfalls jedoch zur Gewinnausschüttung verwendet werden.

§ 5

Die Aktien lauten auf Namen.

§ 6

Der Anspruch der Aktionäre auf Verbriefung der Aktien wird ausgeschlossen.

III. Vorstand

§ 7

1) Der Vorstand besteht aus einer oder mehr, höchstens aber fünfundzwanzig Personen. Die Zahl der Mitglieder bestimmt der Aufsichtsrat.

2) Der Aufsichtsrat hat für den Vorstand eine Geschäftsordnung zu erlassen.

§ 8

Die Gesellschaft wird, wenn der Vorstand aus einer Person besteht, durch diese, wenn er aus mehreren Personen zusammengesetzt ist, durch zwei Vorstandsmitglieder gemeinsam oder durch ein Vorstandsmitglied gemeinsam mit einem Prokuristen vertreten.

Der Aufsichtsrat wird ermächtigt, durch Beschluß einem, mehreren oder allen Vorstandsmitgliedern selbständige Vertretungsbefugnis zu erteilen oder besondere Vertretungsregelungen festzulegen.

IV. Aufsichtsrat

§ 9

1) Der Aufsichtsrat besteht aus mindestens drei, höchstens sechs von der Hauptversammlung gewählten Mitgliedern.

2) Die gewählten Aufsichtsratsmitglieder werden – falls nicht für eine kürzere Funktionsperiode – für die Zeit bis zur Beendigung der Hauptversammlung bestellt, die über die Entlastung für das vierte Geschäftsjahr nach der Wahl beschließt. Das Geschäftsjahr, in dem das Aufsichtsratsmitglied gewählt wurde, wird nicht mitgerechnet.

   Die Wiederwahl ist zulässig.

3) Scheidet ein Mitglied vor dem Ablauf der Funktionsperiode aus, so bedarf es der Ersatzwahl in der nächsten ordentlichen Hauptversammlung. Eine Ersatzwahl durch eine außerordentliche Hauptversammlung ist jedoch ungesäumt vorzunehmen, wenn die Zahl der Aufsichtsratsmitglieder unter drei sinkt.

4) Ersatzwahlen erfolgen auf den Rest der Funktionsperiode des ausgeschiedenen Mitgliedes.

5) Jedes Mitglied des Aufsichtsrates kann seine Funktion unter Einhaltung einer vierwöchigen Frist ohne Angabe von Gründen mit schriftlicher Anzeige an den Vorstand niederlegen.

§ 10

1) Der Aufsichtsrat wählt unmittelbar nach seiner Wahl in einer ohne besondere Einladung stattfindenden Sitzung aus seiner Mitte für seine Funktionsperiode den Aufsichtsratsvorsitzenden und einen Stellvertreter. Legt der Vorsitzende oder sein Stellvertreter seine Funktion nieder oder scheidet er aus dem Aufsichtsrat aus, so hat der Aufsichtsrat unverzüglich eine Neuwahl für die restliche Funktionsperiode des Ausgeschiedenen vorzunehmen.

2) Der Aufsichtsrat kann sich seine Geschäftsordnung selbst geben.

§ 11

1) Sitzungen des Aufsichtsrates werden durch den Aufsichtsratsvorsitzenden unter Angabe der Tagesordnung mit einer Frist von mindestens einer Woche schriftlich, fernschriftlich, telegrafisch, fernmündlich oder mündlich einberufen. In dringenden Fällen kann der Vorsitzende diese Frist angemessen verkürzen.

2) Der Aufsichtsrat ist beschlußfähig, wenn mindestens drei Mitglieder, darunter der Vorsitzende oder sein Stellvertreter, anwesend sind. Der Vorsitzende, im Falle seiner Verhinderung sein Stellvertreter, leitet die Sitzung. Die Art der Abstimmung bestimmt der Leiter der Sitzung.

3) Beschlüsse werden mit einfacher Mehrheit der abgegebenen Stimmen gefaßt. Im Falle der Stimmengleichheit entscheidet - auch bei Wahlen - die Stimme des Leiters der Sitzung.

4) Ein Aufsichtsratsmitglied kann eine nicht dem Aufsichtsrat angehörende Person schriftlich ermächtigen, an seiner Stelle seine schriftliche Stimmabgabe zu überreichen.

5) Ein Aufsichtsratsmitglied kann ein anderes Aufsichtsratsmitglied schriftlich mit seiner Vertretung bei einer einzelnen Sitzung betrauen; das vertretene Aufsichtsratsmitglied ist bei der Feststellung der Beschlußfähigkeit einer Sitzung (Abs. 2) nicht mitzuzählen. Das Recht, den Vorsitz zu führen, kann nicht übertragen werden.

6) Über die Verhandlungen und Beschlüsse des Aufsichtsrates ist eine Niederschrift anzufertigen, die vom Leiter der Sitzung zu unterzeichnen ist.

7) Beschlüsse können auch auf schriftlichem Wege gefaßt werden, wenn der Vorsitzende oder im Falle seiner Verhinderung sein Stellvertreter aus besonderen Gründen eine solche Beschlußfassung anordnet und kein Mitglied des Aufsichtsrates ausdrücklich diesem Verfahren widerspricht. Für die Stimmabgabe gelten die Bestimmungen des Abs. 3 entsprechend. Die Vertretung nach Abs. 5 ist bei Beschlußfassung durch schriftliche Stimmabgabe nicht zulässig.

§ 12

Willenserklärungen des Aufsichtsrates sind vom Vorsitzenden des Aufsichtsrates oder im Falle seiner Verhinderung von seinem Stellvertreter abzugeben.

§ 13

Die Mitglieder des Aufsichtsrates erhalten außer dem Ersatz ihrer baren Auslagen für ihre Tätigkeit eine Vergütung, deren Höhe durch Beschluß der Hauptversammlung bestimmt wird.

Unterliegt der Auslagenersatz der Umsatzsteuer, wird der Steuerbetrag von der Gesellschaft getragen.

Die Vergütung an die Mitglieder des ersten Aufsichtsrates erfolgt durch Hauptversammlungsbeschluß - § 87 Abs. 4 AktG.

§ 14

Der Aufsichtsrat kann Satzungsänderungen, die nur die Fassung betreffen, beschließen.

V. Hauptversammlung

§ 15

1) Die Hauptversammlung wird durch den Vorstand einberufen.

2) Die Hauptversammlung wird am Sitz der Gesellschaft oder einer ihrer inländischen Zweigniederlassungen oder in einer Landeshauptstadt Österreichs abgehalten.

§ 16

Die Berechtigung zur Teilnahme an der Hauptversammlung und zur Ausübung des Stimmrechts und der übrigen Aktionärsrechte, die im Rahmen der Hauptversammlung geltend zu machen sind, richtet sich nach der Eintragung im Aktienbuch jeweils am Ende des zehnten Tages vor dem Tag der Hauptversammlung (Nachweisstichtag).

§ 17

Jede Stückaktie gewährt eine Stimme. Das Stimmrecht wird nach der Anzahl der Stückaktien ausgeübt.

§ 18

1) Den Vorsitz in der Hauptversammlung führt der Vorsitzende des Aufsichtsrates oder bei seiner Verhinderung sein Stellvertreter. Ist keiner von diesen erschienen oder zur Leitung der Versammlung bereit, so leitet der zur Beurkundung beigezogene Notar die Versammlung zur Wahl eines Vorsitzenden.

2) Der Vorsitzende der Hauptversammlung leitet die Verhandlungen und bestimmt die Reihenfolge der Gegenstände der Tagesordnung sowie die Art der Abstimmung.

§ 19

Sofern das Gesetz oder die Satzung nicht zwingend eine andere Mehrheit vorschreibt, beschließt die Hauptversammlung mit einfacher Mehrheit der abgegebenen

Stimmen und, soweit eine Kapitalmehrheit erforderlich ist, mit einfacher Mehrheit des bei der Beschlußfassung vertretenen Grundkapitals, sofern das Gesetz oder die Satzung nicht zwingend eine andere Mehrheit vorschreibt.

VI. Jahresabschluß und Gewinnverteilung

§ 20

1) Das Geschäftsjahr ist das Kalenderjahr.

2) Das erste Geschäftsjahr endet mit Ablauf des Kalenderjahres, in welchem die Gesellschaft im Firmenbuch eingetragen worden ist.

§ 21

1) Innerhalb der ersten fünf Monate eines jeden Geschäftsjahres hat der Vorstand für das vergangene Geschäftsjahr den Jahresabschluß samt Anhang und den Lagebericht nach Prüfung durch den Abschlußprüfer sowie den Vorschlag für die Gewinnverteilung dem Aufsichtsrat vorzulegen.

2) Billigt der Aufsichtsrat den Jahresabschluß, so ist dieser festgestellt.

3) Die Hauptversammlung beschließt alljährlich in den ersten acht Monaten des Geschäftsjahres über die Verteilung des Bilanzgewinnes, die Entlastung des Vorstandes und des Aufsichtsrates und die Wahl des Abschlußprüfers, (ordentliche Hauptversammlung).

§ 22

1) Der Bilanzgewinn, der sich nach Vornahme der Abschreibungen, Wertberichtigungen, Rückstellungen und Rücklagen - einschließlich der Einstellung in die gesetzliche Rücklage - ergibt, wird an die Aktionäre verteilt, soweit die Hauptversammlung keine andere Verwendung beschließt. Die Hauptversammlung kann den Bilanzgewinn ganz oder teilweise von der Verteilung ausschließen.

2) Die Zahlung des zur Verteilung gelangenden Betrages aus dem Bilanzgewinn erfolgt spätestens einen Monat nach der Hauptversammlung, die über die Verwendung des Bilanzgewinnes beschlossen hat, soferne nicht ein anderer Zahlungstermin von ihr festgelegt worden ist.

3) Binnen drei Jahren nach Fälligkeit nicht behobene Gewinnanteile der Aktionäre verfallen zugunsten der freien Rücklage der Gesellschaft.

VII. Umwandlungsaufwand

§ 23

1) Die Aktiengesellschaft ist zufolge Umwandlung gemäß §§ 245 ff AktG aufgrund des Generalversammlungsbeschlusses vom 10. Juli 2000 aus der „STRABAG GmbH", Spittal an der Drau, FN 61689 w, hervorgegangen.
2) Der mit der Umwandlung der Gesellschaft in eine Aktiengesellschaft verbundene Gesamtaufwand wird mit dem Höchstbetrag von € 18.168,21 (achtzehntausendeinhundertachtundsechzig Euro und einundzwanzig Cent) festgesetzt, welcher bis zu diesem Höchstbetrag von der Gesellschaft zu tragen ist.

STRABAG
STRABAG AG

Zur Vorlage gemäß § 148 (Paragraph einhundertachtundvierzig) Absatz 1 (eins) Aktiengesetz an das zuständige Firmenbuchgericht. ----------

Beurkundung

Ich bestätige, dass bei dem vorstehenden Wortlaut der Satzung der **STRABAG AG** mit dem Sitz in **Spittal an der Drau** die geänderten Bestimmungen derselben mit dem vom öffentlichen Notar Doktor Christoph Bieber mit dem Amtssitz in Wien - Innere Stadt zur Geschäftszahl: 22.254 vom 2. (zweiten) Juli 2012 (zweitausendzwölf) beurkundeten Beschluss über die Änderung der Satzung und die unveränderten Bestimmungen mit dem zuletzt beim Firmenbuch eingereichten vollständigen Wortlaut der Satzung übereinstimmen. ----------

Wien, am 13. (dreizehnten) Juli 2012 (zweitausendzwölf). ----------

Dr. Christoph BIEBER ÖFFENTLICHER NOTAR WIEN - Innere Stadt

DR. CHRISTIAN MAYER
NOTAR - PARTNER
als Substitut des öffentlichen Notars Dr. Christoph Bieber
mit dem Amtssitz in Wien – Innere Stadt

VODOVOD I KANALIZACIJA VIK DANILOVGRAD

STRABAG
STRABAG AG

Diese Fotokopie stimmt mit dem elektronischen Ausdruck aus der Urkundensammlung des Firmenbuchgerichts wort- und ziffernmäßig vollkommen überein.----------

Wien, am 22.05.2013 (zweiundzwanzigsten Mai zweitausenddreizehn).----------

Certified to be a true photocopy in words and figures of the electronic printout from the documents filed with the Company Register court. ----------

Vienna, 22.05.2013 (May twentysecond, twothousandthirteen). ----------

Dr. Elisabeth NEUWIRTH ÖFFENTLICHE NOTARIN Wien - Neubau

öffentliche Notarin
notary public

STRABAG
STRABAG AG

Certified translation from German

CERTIFIED PHOTOCOPY

STATUTE

as adopted by resolution by the Shareholders' Meeting of 02.07.2012

I. General provisions

§ 1

1) The name of the Company shall be "STRABAG AG".

2) The seat of the Company shall be in Spittal an der Drau.

3) The duration of the Company shall not be limited to any specific term.

§ 2

1) The purpose of the Company shall be:

a) the planning and execution of constructions of any kind, alone or in joint venture with other construction companies,
b) the acquisition of all the relevant industrial patent rights and procedures,
c) trade with all kinds of commodities, in particular trade with building materials,
d) the operation of ready-mix concrete works, stone, sand and gravel quarries,
e) the leasing of construction machinery and equipment,
f) the equitable conversion of real estate and similar rights,
g) services in the field of automatic data processing and information technology, system analysis, programming and organisation,
h) the trade of insurance agent,
i) the acquisition, administration and realisation of all kinds of investments, in particular in similar companies within the country and abroad,
j) mechanical engineering, industrial engineering, pipeline construction and similar activities,
k) the construction, purchase and sale of single- and multi-family homes and the creation of freehold housing,
l) operation of the trade of real estate agent and real estate administration,
m) operation of the plastering trade,
n) operation of the builder-owner trade,
o) collector and recycler of special waste,
p) leasing of labour,
q) the trade of manufacturing concrete goods, bituminous finishing, thermal, cold, sound and fire insulation, insulation against moisture and water pressure, asphalting, stone-wood laying and screed manufacturing, and of stone chip recycling,
r) the operation of blasting companies,
s) the trades of joiner, well digger and stonemason,
t) the trade of gas and water plumbing,
u) the operation of engineering offices and test labs,
v) the transportation of goods with motor vehicles,
w) advertising agency.

Mag. phil. Ingrid Neff * Allgem. beeideter und gerichtlich zertifizierter Dolmetsch * STRABAG STRABAG AG

2) The Company shall be entitled to do any business and take any measures that may appear necessary or useful in achieving the objectives of the Company, in particular the acquisition of real estate, the establishment of branch offices and subsidiaries within the country and abroad, as well as investment in other companies.

§ 3

Publications by the Company shall be made, where bindingly required pursuant to the Companies Act, in the Official Gazette of "Wiener Zeitung". All other publications by the Company shall be made in accordance with the applicable statutory regulations.

II. Capital Stock and Shares

§ 4

1) The capital stock of the Company shall be € 12,000,000.- (twelve million euro).

2) It shall be divided into 1,500,000 (one million five hundred thousand) shares of stock.

3) One part in the amount of € 6,358,872.99 (six million three hundred and fifty-eight thousand eight hundred and seventy two euro and ninety-nine cents) of the free earnings reserves reported in the financial statement of "STUAG Bau-Aktiengesellschaft", now "STRABAG AG", Spittal an der Drau, FN 61689 w, as of 31.12.1994 (thirty-first December nineteen ninety-four) is allocated to an appropriated reserve. This appropriated reserve may only be used for a capital increase from own capital, or to balance a net loss that would otherwise have to be reported, but in no case for a distribution of profit.

§ 5

The shares shall be registered.

§ 6

The shareholders' right to obtain share certificates shall be excluded.

III. Executive Board

§ 7

1) The Executive Board shall consist of one or more, but not more than twenty-five members. The Supervisory Board shall determine the number of members.

156

Mag. phil. Ingrid Neff
Allgem. beeideter und gerichtlich zertifizierter Dolmetsch für Englisch
STRABAG
STRABAG AG

2) The Supervisory Board shall issue a Code of Procedure for the Executive Board.

§ 8

The Company shall, if the Executive Board consists of one member, be represented by this member; if it consists of more than one member, it shall be represented by two members of the Executive Board jointly, or by one member of the Executive Board and one authorised signatory ("Prokurist") jointly.

The Supervisory Board is authorised to grant one, several or all members of the Executive Board independent rights of representation or to define special representation regulations by resolution.

IV. Supervisory Board

§ 9

1) The Supervisory Board shall consist of at least three and at most six members elected by the Shareholders' Meeting.

2) The elected members of the Supervisory Board shall – unless they are elected for a shorter term of office – be appointed for the period until the end of the Shareholders' Meeting passing resolution on approval of the fourth financial year after the election. The financial year in which the member of the Supervisory Board was elected shall not be counted.

   Re-election shall be permissible.

3) If a member resigns before the end of his term of office, a replacement must be elected at the next ordinary Shareholders' Meeting. A replacement shall however be elected forthwith by an extraordinary Shareholders' Meeting, if the number of members of the Supervisory Board drops below three.

4) Replacements shall be elected for the remaining term of office of the retired member.

5) Any member of the Supervisory Board may resign from office with a four-week period of notice without stating reasons by notifying the Executive Board in writing.

§ 10

1) Immediately after being elected, the Supervisory Board shall, in a meeting held without separate convocation, elect the Chairman of the Supervisory Board and a deputy from among its members. If the Chairman or his deputy resigns from office or resigns from the Supervisory Board, the Supervisory Board must immediately hold a new election for the remaining term of office of the resigned member.

Mag. phil. Ingrid Neff
Allgem. beeideter und gerichtlich beeideter Dolmetsch für Englisch
STRABAG
STRABAG AG

2) The Supervisory Board may adopt its own Code of Procedure.

§ 11

1) Meetings of the Supervisory Board shall be convoked by the Chairman of the Supervisory Board with a period of at least one week's notice in writing, by fax, by telegram, by telephone or verbally, thereby stating the agenda. In urgent cases, the Chairman may shorten this period appropriately.

2) The Supervisory Board shall have a quorum if at least three members, including the Chairman or his deputy, are present. Meetings shall be chaired by the Chairman or, in his absence, by his deputy. The chairman of the meeting shall determine the method of voting.

3) Resolutions shall be passed by a simple majority of the votes cast; in the event of a tie - even in elections - the chairman of the meeting shall cast the deciding vote.

4) A member of the Supervisory Board may grant a person who is not a member of the Supervisory Board power of attorney to submit his written vote on his behalf.

5) A member of the Supervisory Board may appoint another member of the Supervisory Board to represent him at an individual meeting in writing. The represented member of the Supervisory Board shall not be counted when determining the quorum of a meeting (Par. 2). The right to chair a meeting cannot be transferred.

6) Minutes of the meetings and resolutions of the Supervisory Board shall be drawn up, which shall be signed by the chairman of the meeting.

7) Resolutions may also be passed in writing, if this is ordered for special reasons by the Chairman or, if he is incapacitated, by his deputy, and if no member raises any express objections to this procedure. The provisions of Par. 3 shall apply accordingly to the voting procedure. Representation in accordance with Par. 5 shall not be permissible in the case of resolutions passed by written votes.

§ 12

Declarations of intent by the Supervisory Board shall be made by the Chairman of the Supervisory Board or, if he is incapacitated, by his deputy.

§ 13

In addition to reimbursement for their cash expenses, the members of the Supervisory Board shall receive a remuneration for their services, the amount of which shall be defined by resolution by the Shareholders' Meeting.

Mag. phil. Ingrid Neff * Allgem. beeideter und gerichtlich zertifizierter Dolmetsch für Englisch * STRABAG AG

If the reimbursement for cash expenses is subject to sales tax, the tax amount shall be paid by the Company.

The remuneration for the members of the first Supervisory Board shall be determined by resolution by the Shareholders' Meeting - § 87 Par. 4 *AktG* [Stock Corporations Act].

§ 14

The Supervisory Board may adopt amendments to the Statute that concern only the wording.

V. Shareholders' Meeting

§ 15

1) The Shareholders' Meeting shall be convoked by the Executive Board.

2) The Shareholders' Meeting shall take place at the seat of the Company or one of its Austrian branch offices, or in one of the Austrian provincial capitals.

§ 16

The right to attend the Shareholders' Meeting and to vote as well as the other shareholder rights that may be exercised within the scope of the Shareholders' Meeting are based on the entry in the Register of Shares at the end of the tenth day prior to the day of the Shareholders' Meeting (verification reference date).

§ 17

Every share of stock shall have one vote. The voting right shall be based on the number of shares of stock.

§ 18

1) The Shareholders' Meeting shall be chaired by the Chairman of the Supervisory Board or, in his absence, by his deputy. If neither the Chairman nor his deputy is present or willing to chair the meeting, the Notary called in to notarize the Shareholders' Meeting shall chair the meeting until a chairman is elected.

2) The chairman of the Shareholders' Meeting shall chair the discussions and determine the order of the items on the agenda as well as the method of voting.

§ 19

Unless another majority is peremptorily required by law or this Statute, the Shareholders' Meeting shall pass resolutions by simple majority of the votes cast or, in

159

Mag. phil. Ingrid Neu
Allgem. beeideter und gerichtlich zertifizierter Dolmetsch für Englisch
STRABAG
STRABAG AG

cases in which a capital majority is required, by simple majority of the capital stock represented at the time of resolution, unless another majority is peremptorily required by law or this Statute.

VI. Financial Statement and Distribution of Profit

§ 20

1) The financial year shall be the calendar year.

2) The first financial year shall end at the end of the calendar year in which the Company was entered in the Register of Companies.

§ 21

1) Within the first five months of every financial year, the Executive Board shall prepare the financial statement with notes and a management report for the previous financial year, and shall submit these after auditing by an auditor to the Supervisory Board together with a proposal for the distribution of profit.

2) If the Supervisory Board approves the financial statement, it shall be considered accepted.

3) In the first eight months of every financial year, the Shareholders' Meeting shall pass a resolution on the distribution of profit, approval of the acts of the Executive Board and of the Supervisory Board, and selection of the auditor (ordinary Shareholders' Meeting).

§ 22

1) The net profit after deduction of depreciation, adjustments, reserves and provisions – including allocation to the statutory reserve – shall be distributed among the shareholders unless resolved otherwise by the Shareholders' Meeting. The Shareholders' Meeting may exclude the net profit from distribution in whole or in part.

2) The amount of net profit to be distributed shall be payable not later than one month after the Shareholders' Meeting that has passed resolution on the use of the net profit, unless this Shareholders' Meeting has specified a different payment date.

3) Shares in profit not collected by shareholders within three years of falling due shall be forfeited to the benefit of the Company's free reserve.

Mag. phil. Ingrid Neff
Allgem. beeidigter und gerichtlich zertifizierter Dolmetsch für Englisch
STRABAG AG

VII. Reorganisation Cost

§ 23

1) The stock corporation has emerged as a result of reorganisation pursuant to §§ 245 ff *AktG* in accordance with the resolution of the Shareholders' Meeting of 10 July 2000 from "STRABAG GmbH", Spittal an der Drau, FN 61689 w.

2) The total costs associated with the reorganisation as a stock corporation are defined as an amount of € 18,168.21 (eighteen thousand one hundred and sixty-eight euro and twenty-one cents), which shall be borne up to this maximum amount by the Company.

Mag. phil. Ingrid Neff
Allgem. beeideter und gerichtlich zertifizierter Dolmetsch für Englisch

For submission to the competent Company Register Court as set out in § 148 (section one hundred and forty-eight) paragraph 1 (one) Stock Corporations Act. ----------

Notarisation

I herewith confirm that in this wording of the Statute of **STRABAG AG** with seat in **Spittal an der Drau** the amended provisions of the same fully correspond with the resolution on amendment of the Statute notarised by the Notary Public Doctor Christoph Bieber with official seat in Vienna - Inner City under file reference number: 22.254, dated 2 (second) July 2012 (two thousand and twelve), and that the unchanged provisions correspond with the full wording of the Statute last submitted to the Company Register. ----------

Vienna, this 13 (thirteenth) July 2012 (two thousand and twelve). ----------

Round seal: Dr. Christoph BIEBER
Notary Public
Vienna – Inner City

[signed]
DR. CHRISTIAN MAYER
NOTARY PARTNER
as substitute for the Notary Public Dr. Christoph Bieber
with official seat in Vienna – Inner City

Mag. phil. Ingrid Neff
Allgem. beeideter und gerichtlich zertifizierter Dolmetsch für Englisch

VODOVOD I KANALIZACIJA d.o.o. VIK DANILOVGRAD

162

STRABAG
STRABAG AG

Certified translation from German

Certified to be a true photocopy in words and figures of the electronic printout from the document collection of the Company Register Court. ----------

Vienna, this 22.05.2013 (twenty-second May two thousand and thirteen). ----------

Round seal: Dr. Elisabeth NEUWIRTH
Notary Public
Vienna – Neubau

[signed]
Notary Public

Mag. phil. Ingrid Neff
Allgem. beeideter und gerichtlich zertifizierter Dolmetsch für Englisch

Unter Berufung auf den abgelegten Eid bestätige ich, dass vorstehende Übersetzung mit der angehefteten Urschrift / ~~Kopie~~ in deutscher Sprache voll inhaltlich übereinstimmt.

With reference to the oath sworn by me, I certify that this is a true translation of the German original / ~~copy~~ attached.

Mag. Ingrid Neff

Digital unterschrieben von Ingrid Neff
CN: CN = Ingrid Neff, SN = Neff, G = Ingrid, C = AT, OU = Allg. beeidete/r und gerichtlich zertifizierte/r Dolmetscher/in, T = Mag.
Datum: 2013.05.23 12:37:34 +02'00'

VIK

STRABAG
STRABAG AG

FINANZVERWALTUNG

Finanzamt Klagenfurt
Veranlagungsleitstelle
Kempfstraße 2 u. 4
9020 Klagenfurt

Fa.
Strabag AG

Ortenburgerstr 27
9800 Spittal/Drau

Steuernummer/Aktenzeichen
022/4246

Datum
8.Februar 2006

Bitte führen Sie bei allen schriftlichen Eingaben an das Finanzamt Ihre Steuernummer an.

Bei Rückfragen wenden Sie sich bitte an (Name/Telefon)
Martina Zubarev 0463/539-3115

Betreff: UID-Nr.

Sehr geehrter Steuerzahler!

Bezugnehmend auf Ihre Anfrage vom 8. Februar 2006 teilt Ihnen das Finanzamt mit, dass für Sie mit Bescheid vom 29. September 1994 aufgrund des Art. 28 des UStG 1994, BGBl.Nr. 633 folgende UID-Nr. erteilt wurde:

ATU14487107

Finanzamt Klagenfurt
Unterschrift

PC [ZUBAREV]

164

DVR: 0009571

STRABAG
STRABAG AG

Diese Fotokopie stimmt mit dem mir vorliegenden Original wort- und ziffernmäßig vollkommen überein. ----------

Wien, am 27.08.2007 (siebenundzwanzigsten August zweitausendsieben). ----------

Dr. Elisabeth NEUWIRTH
ÖFFENTLICHE NOTARIN
Wien - Neuban

öffentliche Notarin

STRABAG
STRABAG AG

TAX ADMINISTRATION

Inland Revenue Office Klagenfurt
Assessment Centre
Kempfstraße 2 & 4
9020 Klagenfurt

Tax number/file number
022/4246

To
STRABAG AG

Ortenburgerstraße 27
9800 Spittal/Drau

Date:
8 February 2006

Please indicate your tax number in all correspondence with the Inland Revenue Office

Should you have any questions, please contact
Martina Zubarev
0463/539-3115

Subject: VAT Number

Dear Taxpayer,

With reference to your inquiry of 8 February 2006, the Inland Revenue Office herewith informs you that by decree dated 29 September 1994 based on Art. 28 of the Austrian Sales Tax Act of 1994, Fed. Law Gazette No. 633, you have been assigned the following VAT number

ATU 14487107

Round seal:
INLAND REVENUE OFFICE
KLAGENFURT

Signature: illegible
Signature

Mag. phil. Ingrid Neff
Allgem. beeideter und gerichtlich zertifizierter Dolmetsch für Englisch
BADEN

166

STRABAG
STRABAG AG

Certified to be a true copy in words and figures of the original presented to me.--
Vienna, 27.08.2007 (twenty-seventh August two thousand and seven). ----------

Round seal: Dr. Elisabeth NEUWIRTH,
Notary Public, Vienna – Neubau

Signature: illegible
Notary Public

Mag. phil. Ingrid Neff
Allgem. beeideter und gerichtlich zertifizierter Dolmetsch für Englisch
BADEN

Unter Berufung auf den abgelegten Eid bestätige ich, dass vorstehende Übersetzung mit der angehefteten Urschrift / ~~Kopie~~ in deutscher Sprache voll inhaltlich übereinstimmt.

With reference to the oath sworn by me, I certify that this is a true translation of the German original / ~~copy~~ attached.

Baden, 15.05.2008

Gerichtlich zertifizierte Dolmetscherin
Certified court interpreter

D.O.O. VODOVOD I KANALIZACIJA VIK DANILOVGRAD

STRABAG
STRABAG AG

CARINTHIA

DISTRICT AUTHORITY SPITTAL AN DER DRAU

Tiroler Straße 16, A – 9800 Spittal an der Drau

Ref.: SP4-GAN-285/2-2001 DVR: 0002411

Austrian duty stamp: ATS 180.00
Stamp: District Authority,
9800 Spittal an der Drau

TRADE LICENCE

By decree by the Provincial Governor of Carinthia dated 29 March 2001, effective from 24 April 2001, No.: Gew-2134/9/2000, the submitted notification regarding the transfer of the trade licence indicated below from Ilbau Liegenschaftsverwaltung GmbH, Company Register No. FN 88888 v, (formerly Ilbau GmbH) to the successor company STRABAG AG, Company Register No. FN 61689 w, is herewith acknowledged with effect from 1 September 2000.

Trade register no.: 51656

Licence holder: STRABAG AG

Seat: 9800 Spittal an der Drau

Legal form: Stock corporation

Trade:

Master builder trade in the form of an industrial enterprise

Location: Ortenburgerstraße 27, 9800 Spittal an der Drau,
Municipality of Spittal an der Drau

Date of commencement of trade licence: 1 September 2000

Spittal an der Drau, 18 May 2001
For the District Governor:
Signature: illegible
(Steinwender)
Round seal of the District Authority, Spittal an der Drau

Mag. phil. Ingrid Neff
Allgem. beeideter und gerichtlich zertifizierter Dolmetsch für Englisch
BADEN

STRABAG
STRABAG AG

District Authority
9800 Spittal a.d. Drau
Ref.: SP4-GAN-285/2001

At the same time, the following person is registered as the managing director of the trade indicated overleaf:

First and last name:	Dipl. Ing. Dietrich Franz SCHOBESBERGER
Date of birth:	24 February 1940
Place/country of birth:	Innsbruck, Tyrol
Nationality:	Austrian
Street, house number:	Höhenweg 13
Postal code, town:	6065 Thaur

Spittal an der Drau, 18 May 2001
For the District Governor:
Signature: illegible
(Steinwender)
Round seal of the District Authority, Spittal an der Drau

Certified to be a true copy of the original presented to me, consisting of one sheet bearing a duty stamp to the value of one hundred and eighty Austrian schillings. -----

Leonding, 1 (first) June 2001 (two thousand and one). ----------

Austrian duty stamp: ATS 50.00

Round seal: Dr. Georg BRUCKBAUER, Notary Public, Leonding, Upper Austria
Signature: illegible
Notary Public

Certified to be a true photocopy in words and figures of the certified photocopy presented to me. ----------

Vienna, 04.08.2008 (fourth August two thousand and eight). ----------

Round seal: Dr. Elisabeth NEUWIRTH, Notary Public, Vienna - Neubau
Signature: illegible
Notary Public

Mag. phil. Ingrid Neff
Allgem. beeideter und gerichtlich zertifizierter Dolmetsch für Englisch
BADEN

Unter Berufung auf den abgelegten Eid bestätige ich, dass vorstehende Übersetzung mit der ~~mir vorgelegten~~ / angehefteten Urschrift / ~~Kopie~~ in deutscher Sprache voll inhaltlich übereinstimmt.

With reference to the oath sworn by me, I certify that this is a true translation of the German original / ~~copy presented to me~~ / attached.

Baden, 07.08.2008

Mag. Ingrid Neff
Gerichtlich zertifizierte Dolmetscherin
Certified court interpreter

VIK VODOVODI I KANALIZACIJA DANILOVGRAD

169

STRABAG
STRABAG AG

KÄRNTEN

BEZIRKSHAUPTMANNSCHAFT SPITTAL AN DER DRAU

Tiroler Straße 16-A - 9800 Spittal an der Drau

Zahl: **SP4-GAN-285/2-2001**

DVR: 0090026

Gewerbeschein

Bezirkshauptmannschaft
9800 Spittal

Mit dem am 24.04.2001 in Rechtskraft erwachsenen Bescheid des Landeshauptmannes von Kärnten vom 29.03.2001, Zahl: Gew-21349/2000, wurde die erstattete Anzeige betreffend den Übergang der Gewerbeberechtigung von der Ilbau Liegenschaftsverwaltung GmbH, FN 88888 x (vormals Ilbau GmbH), auf die durch Spaltung entstandene STRABAG AG, FN 61689 w, mit Wirkung vom 01.09.2000 zur Kenntnis genommen.

Gewerberegisterzahl: 51656

Gewerbeinhaber: STRABAG AG

Sitz: 9800 Spittal an der Drau

Rechtsform: Aktiengesellschaft

Gewerbe:

Baumeister (Baumeisterindustriebetrieb)

Standort: Ortenburgerstraße 27, 9800 Spittal an der Drau
Stadtgemeinde Spittal an der Drau

Tag der Entstehung der Gewerbeberechtigung: 01.09.2000

Spittal an der Drau, am 18.05.2001
Für den Bezirkshauptmann:
Steinwender

STRABAG
STRABAG AG

Bezirkshauptmannschaft
9800 Spittal a.d. Drau
Zahl: SP4-GAN-285/2001

Gleichzeitig wird nachstehende Person als Geschäftsführer zur Ausübung des umseitigen Gewerbes zur Kenntnis genommen:

Vor- und Zuname:	Dipl. Ing. Dietrich Franz SCHOBESBERGER
Geburtsdatum:	24.02.1940
Geburtsort/land:	Innsbruck, Tirol
Staatsbürgerschaft:	Österreich
Straße, Hausnummer:	Höhenweg 13
Postleitzahl, Ort:	6065 Thaur

Bezirkshauptmannschaft Spittal a.d. Drau 4

Spittal an der Drau, am 18.05.2001
Für den Bezirkshauptmann:
(Stellvertreter)

Diese Kopie stimmt mit der mir vorliegenden, aus einem mit einhundertachtzig Schilling gestempelten Blatt bestehenden Original vollkommen überein. ----------
Leonding, am 1. (ersten) Juni 2001 (zweitausendeins).----

GERICHTSSACHVERSTÄNDIGER BRUCKBAUER ÖFFENTLICHER NOTAR Leonding Österreich

öff. Notar

171

STRABAG
STRABAG AG

Mag. pr

Dr. Elisabeth NEUWIRTH
ÖFFENTLICHE NOTARIN
Wien - Neubau

D.O.O. VODOVOD I KANALIZACIJA
VIK
TREBINJE

STRABAG
STRABAG AG

Republic of Austria

Provincial Court Klagenfurt

Stamp: RECEIVED
RECEPTION
03. February 2017
9800 SPITTAL / DRAU

Official Certification

The court of competency for bankrupcy proceedings herewith certifies that against the company STRABAG AG, FN 61689 w, Ortenburgerstrasse 27, no bankruptcy proceedings have been initiated.

Round seal: Provincial Court Klagenfurt

Provincial Court Klagenfurt
Dept. 6, February 1 2017
Signature: illegible

173

STRABAG
STRABAG AG

GISA

Gewerbeinformationssystem Austria
[Trade Information System Austria]

bmwfw
Federal Ministry of
Science, Research and Economics

Date: 20.03.2017 — Updated Extract — DVR: 0037257

AUTHORITY: GISA District Administration Spittal an der Drau
number: (formerly 11258377
REGISTER: 206, TRADE REGISTER NUMBER: 20651656)

TRADE LICENCE DETAILS

Commencement: 01.09.2000

LICENCE HOLDER

Name:	STRABAG AG
Legal form:	Stock corporation
Company register no.:	061689w
Address:	9800 Spittal an der Drau, Ortenburgerstraße 27
GLN:	9110015371345

TRADE WORDING (type of trade: regulated trade)

Master-builder in the form of an industrial operation

THIRD-PARTY LIABILITY INSURANCE as set out in Section 99 Par.7 GewO [Trade Code] available

LOCATION of the LICENSED TRADE

Commencement:	01.09.2000
Municipality:	Spittal an der Drau
Address:	9800 Spittal an der Drau, Ortenburgerstraße 27

MANAGING DIRECTOR (under trade law)

Last name:	Vanzo	
First name:	Herbert	
Born on:	16.06.1957	
Date of appointment:	07.01.2015	appointed by: Licence holder

ADDITIONAL OPERATING FACILITY

Facility number:	81
Location:	1030 Wien, Ungargasse 64/2/3. OG
Commencement:	15.11.2007
Official notice:	Vienna City Council
Facility number:	92
Location:	1210 Wien, Floridsdf.Hauptstr. 1
Commencement:	20.04.2012
Official notice:	Vienna City Council
Facility number:	51
Location:	1220 Wien, Donau-City-Straße 9
Commencement:	26.03.2003
Official notice:	Vienna City Council

STRABAG
STRABAG AG

Facility number:	82
Location:	1220 Vienna, Polgarstrar.e 30
Commencement:	21.03.2008
Official notice:	Vienna City Council
Facility number:	36
Location:	2020 Hollabrunn, Schmiedgasse 19
Commencement:	02.04.2001
Official notice:	District Administration Hollabrunn
Facility number:	41
Location:	2103 Langenzersdorf, Anton-Hanak-Gasse 1-3
Commencement:	02.04.2001
Official notice:	District Administration Korneuburg
Facility number:	33
Location:	2201 Gerasdorf near Vienna, Wagramer Straße 271
Commencement:	15.05.2001
Official notice:	District Administration Korneuburg
Facility number:	29
Location:	2460 Bruck an der Leitha, Industriestraße 16
Commencement:	01.09.2000
Official notice:	District Administration Bruck an der Leitha
Facility number:	27
Location :	2483 Ebreichsdorf, Gildenweg 7
Commencement:	02.04.2001
Official notice:	District Administration Baden
Limitation:	Office operation
Facility number:	32
Location:	2492 Eggendorf, Tritolstraße GStNr: 846/10
Commencement:	03.04.2001
Official notice:	District Administration Wiener Neustadt
Facility number:	28
Location:	2500 Baden bei Wien, Goethegasse 12-14
Commencement:	01.09.2000
Official notice:	District Administration Baden
Facility number:	96
Location:	2700 Wiener Neustadt, Schleppbahngasse 8
Commencement:	30.09.2013
Official notice:	Wiener Neustadt City Council
Facility number:	26
Location:	3100 St. Piilten, Ernst Marker-Str. 20
Commencement:	02.04.2001
Official notice:	City Council of St. Piilten
Facility number:	75
Location:	3352 St. Peter in der Au, Ander Bahn 4
Commencement:	01.09.2000
Official notice:	District Administration Amstetten
Facility number:	76
Location:	3363 Neufurth, Rauscherstraße 10
Commencement:	04.09.2003
Official notice:	District Administration Amstetten

STRABAG
STRABAG AG

Facility number:	94
Location:	3382 Loosdorf, Wienerstraße 24
Commencement:	01.09.2000
Official notice:	District Administration Melk
Facility number:	42
Location:	3464 Hausleiten, Tullnerstraße 341
Commencement:	16.02.2001
Official notice:	District Administration Korneuburg
Facility number:	64
Location:	3532 Rastenfeld, Rastenfeld 206
Commencement:	01.12.2004
Official notice:	District Administration Krems
Facility number:	46
Location:	4030 Linz, Salzburger Straße 321
Commencement:	02.04.2001
Official notice:	Linz City Council
Facility number:	47
Location:	4030 Linz, Salzburger Straße 323
Commencement:	02.04.2001
Official notice:	Linz City Council
Facility number:	48
Location:	4030 Linz, Salzburger Straße 323a
Entstehung:	02.04.2001
Official notice:	Linz City Council
Facility number:	44
Location:	4030 Linz, Schatzdorferstraße 9
Commencement:	02.04.2001
Official notice:	Linz City Council
Facility number:	74
Location:	4400 Steyr, Wolfernstraße 17 d
Commencement:	26.04.2006
Official notice:	Steyr City Council
Facility number:	59
Location:	4600 Wels, Salzburger Straße 205
Commencement:	01.09.2000
Official notice:	Wels City Council
Limitation:	in the Form of an Industrial operation
Facility number:	84
Location:	4662 Steyrermuhl, Dr. Linsinger-Straße 5
Commencement:	02.04.2001
Official notice:	District Administration Gmunden
Limitation:	as in the main operation
Facility number:	83
Location:	4812 Pinsdorf, Vocklabruckerstraße 39
Commencement:	02.04.2001
Official notice:	District Administration Gmunden
Limitation:	as in the main operation
Facility number:	9
Location:	4840 Vocklabruck, Feldgasse 1
Commencement:	02.04.2001
Official notice:	District Administration Vocklabruck

STRABAG
STRABAG AG

Facility number:	73
Location:	4910 Ried i.I., Volksfeststraße 16
Commencement:	03.04.2006
Official notice:	District Administration Ried im Innkreis
Facility number:	71
Location:	5280 Braunau am Inn, Bauhofstraße 14
Commencement:	21.03.2006
Official notice:	District Administration Braunau am Inn
Facility number:	55
Location:	5303 Thalgau, Breitwies 32
Commencement:	01.09.2000
Official notice:	District Administration Greater Salzburg
Facility number:	12
Location:	5570 Mauterndorf, Steindorf 43
Commencement:	01.09.2000
Official notice:	District Administration Tamsweg
Facility number:	10
Location:	5600 St. Johann im Pongau, Urreiting 92
Commencement:	02.04.2001
Official notice:	District Administration St. Johann im Pongau
Facility number:	13
Location:	5632 Dorfgastein, Unterberg 19
Commencement:	01.09.2000
Official notice:	District Administration St. Johann im Pongau
Facility number:	69
Location:	5700 Zell am See, Brucker Bundesstraße 67
Commencement:	02.04.2001
Official notice:	District Administration Zell am See
Facility number:	70
Location:	5760 Saalfelden, Zellerstraße 33b
Commencement:	20.12.2005
Official notice:	District Administration Zell am See
Facility number:	16
Location:	6020 Innsbruck, Karl-Kapferer-Strasse 5
Commencement:	01.09.2000
Official notice:	Innsbruck City Council
Facility number:	68
Location:	6020 Innsbruck, Sterzinger Strasse 1
Commencement:	25.10.2005
Official notice:	Innsbruck City Council
Facility number:	11
Location:	6112 Wattens, Andreas-Hofer-Straße 3
Commencement:	03.07.2003
Official notice:	District Administration Innsbruck
Facility number:	18
Location:	6170 Zirl, Salzstraße 3a
Commencement:	29.10.2001
Official notice:	District Administration Innsbruck
Facility number:	87
Location:	6233 Kramsach, Amerling 130
Commencement:	03.02.2015
Official notice:	District Administration Kufstein

STRABAG
STRABAG AG

Facility number:	6
Location:	6250 Kundl, Luna 66
Commencement:	02.04.2001
Official notice:	District Administration Kufstein
Facility number:	50
Location:	6263 Fugen, Zillerweg 6
Commencement:	02.10.2003
Official notice:	District Administration Schwaz
Facility number:	91
Location:	6380 Sankt Johann in Tirol, Salzburger Straße 35
Commencement:	03.02.2015
Official notice:	District Administration Kitzbuhel
Facility number:	63
Location:	6460 Imst, Thomas-Walch-Straße 34a
Commencement:	10.09.2004
Official notice:	District Administration Imst
Facility number:	79
Location:	6600 Reutte, Anton Maria Schyrle-Straße 7
Commencement:	01.03.2014
Official notice:	District Administration Reutte
Facility number:	20
Location:	6600 Pinswang, Anton-Beirer-Straße 10
Commencement:	09.11.2001
Official notice:	District Administration Reutte
Facility number:	19
Location:	6600 Reutte, Planseestraße 13
Commencement:	08.04.2003
Official notice:	District Administration Reutte
Facility number:	65
Location:	6850 Dornbirn, Gutlestraße 5
Commencement:	09.12.2004
Official notice:	District Administration Dornbirn
Facility number:	90
Location:	7341 Markt Sankt Martin, Industriegelande 5
Commencement:	19.09.2016
Official notice:	District Administration Oberpullendorf
Facility number:	95
Location:	7540 Gussing, Europastraße 1
Commencement:	03.05.2012
Official notice:	District Administration Gussing
Facility number:	53
Location:	8042 Graz, Maggstraße 40
Commencement:	27.02.2003
Official notice:	Graz City Council
Limitation:	scope of the main operation
Facility number:	80
Location:	8160 Weiz, Stahlstraße 1
Commencement:	14.03.2007
Official notice:	District Administration Weiz
Facility number:	57
Location:	8230 Hartberg, Ressavarstraße 24
Commencement:	02.04.2001
Official notice:	District Administration Hartberg-Furstenfeld

Facility number: 23
Location: 8280 Furstenfeld, Burgauer Straße 24 d
Commencement: 16.11.2001
Official notice: District Administration Hartberg-Furstenfeld

Facility number: 98
Location: 8330 Feldbach, Schillerstraße 2
Commencement: 29.03.2016
Official notice: District Administration Southeast Styria

Facility number: 97
Location: 8435 Wagna, Marktplatz 3
Commencement: 22.01.2014
Official notice: District Administration Leibnitz

Facility number: 3
Location: 8443 Gleinstatten, Gleinstatten 15/13
Commencement: 25.05.2001
Official notice: District Administration Leibnitz

Facility number: 52
Location: 8570 Voitsberg, Hauptplatz 4/I
Commencement: 25.03.2005
Official notice: District Administration Voitsberg

Facility number: 54
Location: 8644 Murzhofen, Wiener Straße 15
Commencement: 03.04.2001
Official notice: District Admini stration Bruck-Murzzuschlag

Facility number: 34
Location: 8700 Leoben, Karntnerstraße 322
Commencement: 01.09.2000
Official notice: District Administration Leoben

BRANCH OFFICE MANAGER

Last name: Pottler
First name: Dietwald
Born on. 06.01.1940
Date of appointment: 01.09.2000 appointed by: Licence holder

Facility number: 56
Location: 8740 Zeltweg, Schmiedgasse 14
Commencement: 01.09.2000
Official notice: District Administration Murtal

Facility number: 8
Location: 8753 Fohnsdorf, Hauptstraße 91
Commencement: 02.04.2001
Official notice: Di strict Administration Murtal

Facility number: 99
Location: 8793 Trofaiach, Hauptstraße 42
Commencement: 07.04.2016
Official notice: District Administration Leoben

Facility number: 58
Location: 8841 Frojach-Katsch, Katsch an der Mur 55
Commencement: 02.04.2001
Official notice: District Administration Murau

STRABAG
STRABAG AG

Facility number:	101
Location:	8960 Oblarn, Oblarn 277
Commencement:	02.04.2001
Official notice:	District Administration Liezen
Facility number:	100
Location:	8962 Grobming, Winkl 602
Commencement:	22.06.2001
Official notice:	District Administration Liezen
Facility number:	60
Location:	8984 Pichl/Kainisch, Kainisch 90
Commencement:	02.04.2001
Official notice:	District Administration Liezen
Facility number:	93
Location:	9020 Klagenfurt am Worthersee, Boltzmannstraße 8
Commencement:	01.09.2000
Official notice:	Klagenfurt City Council
Facility number:	85
Location:	9360 Friesach, Industriestraße 42
Commencement:	12.02.2009
Official notice:	District Administration St. Veit an der Glan
Facility number:	45
Location:	9500 Villach, Triglavstraße 9
Commencement:	01.09.2000
Official notice:	Villach City Council
Limitation:	in the Form of an Industrial operation
Facility number:	43
Location:	9710 Feistritz an der Drau, Bauhofweg 209
Commencement:	01.09.2000
Official notice:	District Administration Villach-Land
Limitation:	Master-builder in the Form of an Industrial operation
Facility number:	1
Location:	9800 Spittal an der Drau, Molzbichler Straße 6
Commencement:	20.01.2015
Official notice:	District Administration Spittal an der Drau
Facility number:	89
Location:	9903 Oberlienz, Oberlienz 61
Commencement:	01.09.2000
Official notice:	District Administration Lienz

[Round seal:
REPUBLIC OF AUSTRIA
FEDERAL MINISTRY OF
SCIENCE, RESEARCH AND
ECONOMICS

This document has been signed officially.

[OFFICIAL SIGNATURE]

For information on how to verify the electronic signature, please visit: https://www.signaturpruefung.gv .at/. The picture mark and notes on publication of a paper printout are published on https://www.bmwfw.gv.at/amtssignatur/ or http://www.help.gv.at/.

STRABAG
STRABAG AG

GISA

Gewerbeinformationssystem Austria

bmwfw
Bundesministerium für
Wissenschaft, Forschung und Wirtschaft

Stichtag: 20.03.2017 | Auszug mit aktuellen Daten | DVR: 0037257

Behörde: Bezirkshauptmannschaft Spittal an der Drau
GISA-Zahl: 11258377
(vormals REGISTER: 206, GEWERBEREGISTERNUMMER: 20651656)

DATEN ZUR GEWERBEBERECHTIGUNG

Entstehung: 01.09.2000

GEWERBEINHABERIN

Bezeichnung: STRABAG AG
Rechtsform: Aktiengesellschaft
Firmenbuchnummer: 061689w
Anschrift: 9800 Spittal an der Drau, Ortenburgerstraße 27
GLN: 9110015371345

GEWERBEWORTLAUT (Gewerbeart: reglementiertes Gewerbe)

Baumeister in Form eines Industriebetriebes

HAFTPFLICHTABSICHERUNG gemäß § 99 Abs.7 GewO liegt vor

STANDORT der GEWERBEBERECHTIGUNG

Entstehung: 01.09.2000
Gemeinde: Spittal an der Drau
Anschrift: 9800 Spittal an der Drau, Ortenburgerstraße 27

GESCHÄFTSFÜHRER (gewerberechtlich)

Zuname: Vanzo
Vorname: Herbert
geboren am: 16.06.1957
Tag der Bestellung: 07.01.2015 bestellt durch: GI

WEITERE BETRIEBSSTÄTTE (WB)

WB Nummer: 81
Standort: 1030 Wien, Ungargasse 64/2/3. OG
Entstehung: 15.11.2007
Bescheid: Magistrat der Stadt Wien

WB Nummer: 92
Standort: 1210 Wien, Floridsdf.Hauptstr. 1
Entstehung: 20.04.2012
Bescheid: Magistrat der Stadt Wien

WB Nummer: 51
Standort: 1220 Wien, Donau-City-Straße 9
Entstehung: 26.03.2003
Bescheid: Magistrat der Stadt Wien

VIK

181

STRABAG
STRABAG AG

WB Nummer:	82
Standort:	1220 Wien, Polgarstraße 30
Entstehung:	21.03.2008
Bescheid:	Magistrat der Stadt Wien
WB Nummer:	36
Standort:	2020 Hollabrunn, Schmiedgasse 19
Entstehung:	02.04.2001
Bescheid:	Bezirkshauptmannschaft Hollabrunn
WB Nummer:	41
Standort:	2103 Langenzersdorf, Anton-Hanak-Gasse 1-3
Entstehung:	02.04.2001
Bescheid:	Bezirkshauptmannschaft Korneuburg
WB Nummer:	33
Standort:	2201 Gerasdorf bei Wien, Wagramer Straße 271
Entstehung:	15.05.2001
Bescheid:	Bezirkshauptmannschaft Korneuburg
WB Nummer:	29
Standort:	2460 Bruck an der Leitha, Industriestraße 16
Entstehung:	01.09.2000
Bescheid:	Bezirkshauptmannschaft Bruck an der Leitha
WB Nummer:	27
Standort:	2483 Ebreichsdorf, Gildenweg 7
Entstehung:	02.04.2001
Bescheid:	Bezirkshauptmannschaft Baden
Einschränkung:	Bürobetrieb
WB Nummer:	32
Standort:	2492 Eggendorf, Tritolstraße GStNr: 846/10
Entstehung:	03.04.2001
Bescheid:	Bezirkshauptmannschaft Wiener Neustadt
WB Nummer:	28
Standort:	2500 Baden bei Wien, Goethegasse 12-14
Entstehung:	01.09.2000
Bescheid:	Bezirkshauptmannschaft Baden
WB Nummer:	96
Standort:	2700 Wiener Neustadt, Schleppbahngasse 8
Entstehung:	30.09.2013
Bescheid:	Magistrat der Stadt Wiener Neustadt
WB Nummer:	26
Standort:	3100 St. Pölten, Ernst Märker-Str. 20
Entstehung:	02.04.2001
Bescheid:	Magistrat der Stadt St. Pölten
WB Nummer:	75
Standort:	3352 St. Peter in der Au, An der Bahn 4
Entstehung:	01.09.2000
Bescheid:	Bezirkshauptmannschaft Amstetten
WB Nummer:	76
Standort:	3363 Neufurth, Rauscherstraße 10
Entstehung:	04.09.2003
Bescheid:	Bezirkshauptmannschaft Amstetten
WB Nummer:	94

D.O.O. VODOVOD I KANALIZACIJA VIK DANILOVGRAD

STRABAG
STRABAG AG

Standort:	3382 Loosdorf, Wienerstraße 24
Entstehung:	01.09.2000
Bescheid:	Bezirkshauptmannschaft Melk
WB Nummer:	42
Standort:	3464 Hausleiten, Tullnerstraße 341
Entstehung:	16.02.2001
Bescheid:	Bezirkshauptmannschaft Korneuburg
WB Nummer:	64
Standort:	3532 Rastenfeld, Rastenfeld 206
Entstehung:	01.12.2004
Bescheid:	Bezirkshauptmannschaft Krems
WB Nummer:	46
Standort:	4030 Linz, Salzburger Straße 321
Entstehung:	02.04.2001
Bescheid:	Magistrat der Stadt Linz
WB Nummer:	47
Standort:	4030 Linz, Salzburger Straße 323
Entstehung:	02.04.2001
Bescheid:	Magistrat der Stadt Linz
WB Nummer:	48
Standort:	4030 Linz, Salzburger Straße 323a
Entstehung:	02.04.2001
Bescheid:	Magistrat der Stadt Linz
WB Nummer:	44
Standort:	4030 Linz, Schatzdorferstraße 9
Entstehung:	02.04.2001
Bescheid:	Magistrat der Stadt Linz
WB Nummer:	74
Standort:	4400 Steyr, Wolfernstraße 17 d
Entstehung:	26.04.2006
Bescheid:	Magistrat der Stadt Steyr
WB Nummer:	59
Standort:	4600 Wels, Salzburger Straße 205
Entstehung:	01.09.2000
Bescheid:	Magistrat der Stadt Wels
Einschränkung:	in der Form eines Industriebetriebes
WB Nummer:	84
Standort:	4662 Steyrermühl, Dr. Linsinger-Straße 5
Entstehung:	02.04.2001
Bescheid:	Bezirkshauptmannschaft Gmunden
Einschränkung:	wie im Hauptbetrieb
WB Nummer:	83
Standort:	4812 Pinsdorf, Vöcklabruckerstraße 39
Entstehung:	02.04.2001
Bescheid:	Bezirkshauptmannschaft Gmunden
Einschränkung:	wie im Hauptbetrieb
WB Nummer:	9
Standort:	4840 Vöcklabruck, Feldgasse 1
Entstehung:	02.04.2001
Bescheid:	Bezirkshauptmannschaft Vöcklabruck
WB Nummer:	73

D.O.O. VODOVOD I KANALIZACIJA DANILOVGRAD VIK

STRABAG
STRABAG AG

Standort:	4910 Ried i.I., Volksfeststraße 16
Entstehung:	03.04.2006
Bescheid:	Bezirkshauptmannschaft Ried im Innkreis
WB Nummer:	71
Standort:	5280 Braunau am Inn, Bauhofstraße 14
Entstehung:	21.03.2006
Bescheid:	Bezirkshauptmannschaft Braunau am Inn
WB Nummer:	55
Standort:	5303 Thalgau, Breitwies 32
Entstehung:	01.09.2000
Bescheid:	Bezirkshauptmannschaft Salzburg-Umgebung
WB Nummer:	12
Standort:	5570 Mauterndorf, Steindorf 43
Entstehung:	01.09.2000
Bescheid:	Bezirkshauptmannschaft Tamsweg
WB Nummer:	10
Standort:	5600 St. Johann im Pongau, Urreiting 92
Entstehung:	02.04.2001
Bescheid:	Bezirkshauptmannschaft St. Johann im Pongau
WB Nummer:	13
Standort:	5632 Dorfgastein, Unterberg 19
Entstehung:	01.09.2000
Bescheid:	Bezirkshauptmannschaft St. Johann im Pongau
WB Nummer:	69
Standort:	5700 Zell am See, Brucker Bundesstraße 67
Entstehung:	02.04.2001
Bescheid:	Bezirkshauptmannschaft Zell am See
WB Nummer:	70
Standort:	5760 Saalfelden, Zellerstraße 33b
Entstehung:	20.12.2005
Bescheid:	Bezirkshauptmannschaft Zell am See
WB Nummer:	16
Standort:	6020 Innsbruck, Karl-Kapferer-Strasse 5
Entstehung:	01.09.2000
Bescheid:	Magistrat der Stadt Innsbruck
WB Nummer:	68
Standort:	6020 Innsbruck, Sterzinger Strasse 1
Entstehung:	25.10.2005
Bescheid:	Magistrat der Stadt Innsbruck
WB Nummer:	11
Standort:	6112 Wattens, Andreas-Hofer-Straße 3
Entstehung:	03.07.2003
Bescheid:	Bezirkshauptmannschaft Innsbruck
WB Nummer:	18
Standort:	6170 Zirl, Salzstraße 3a
Entstehung:	29.10.2001
Bescheid:	Bezirkshauptmannschaft Innsbruck
WB Nummer:	87
Standort:	6233 Kramsach, Amerling 130
Entstehung:	03.02.2015
Bescheid:	Bezirkshauptmannschaft Kufstein

D.O.O. VODOVOD I KANALIZACIJA PANILOVGRAD VIK

STRABAG
STRABAG AG

WB Nummer:	6
Standort:	6250 Kundl, Luna 66
Entstehung:	02.04.2001
Bescheid:	Bezirkshauptmannschaft Kufstein

WB Nummer:	50
Standort:	6263 Fügen, Zillerweg 6
Entstehung:	02.10.2003
Bescheid:	Bezirkshauptmannschaft Schwaz

WB Nummer:	91
Standort:	6380 Sankt Johann in Tirol, Salzburger Straße 35
Entstehung:	03.02.2015
Bescheid:	Bezirkshauptmannschaft Kitzbühel

WB Nummer:	63
Standort:	6460 Imst, Thomas-Walch-Straße 34a
Entstehung:	10.09.2004
Bescheid:	Bezirkshauptmannschaft Imst

WB Nummer:	79
Standort:	6600 Reutte, Anton Maria Schyrle-Straße 7
Entstehung:	01.03.2014
Bescheid:	Bezirkshauptmannschaft Reutte

WB Nummer:	20
Standort:	6600 Pinswang, Anton-Beirer-Straße 10
Entstehung:	09.11.2001
Bescheid:	Bezirkshauptmannschaft Reutte

WB Nummer:	19
Standort:	6600 Reutte, Planseestraße 13
Entstehung:	08.04.2003
Bescheid:	Bezirkshauptmannschaft Reutte

WB Nummer:	65
Standort:	6850 Dornbirn, Gütlestraße 5
Entstehung:	09.12.2004
Bescheid:	Bezirkshauptmannschaft Dornbirn

WB Nummer:	90
Standort:	7341 Markt Sankt Martin, Industriegelände 5
Entstehung:	19.09.2016
Bescheid:	Bezirkshauptmannschaft Oberpullendorf

WB Nummer:	95
Standort:	7540 Güssing, Europastraße 1
Entstehung:	03.05.2012
Bescheid:	Bezirkshauptmannschaft Güssing

WB Nummer:	53
Standort:	8042 Graz, Maggstraße 40
Entstehung:	27.02.2003
Bescheid:	Magistrat der Stadt Graz
Einschränkung:	Umfang des Hauptbetriebes

WB Nummer:	80
Standort:	8160 Weiz, Stahlstraße 1
Entstehung:	14.03.2007
Bescheid:	Bezirkshauptmannschaft Weiz

WB Nummer:	57

185

D.O.O. VODOVOD I KANALIZACIJA DANILOVGRAD

STRABAG AG

Entstehung:	02.04.2001
Bescheid:	Bezirkshauptmannschaft Murau
WB Nummer:	101
Standort:	8960 Öblarn, Öblarn 277
Entstehung:	02.04.2001
Bescheid:	Bezirkshauptmannschaft Liezen
WB Nummer:	100
Standort:	8962 Gröbming, Winkl 602
Entstehung:	22.06.2001
Bescheid:	Bezirkshauptmannschaft Liezen
WB Nummer:	60
Standort:	8984 Pichl/Kainisch, Kainisch 90
Entstehung:	02.04.2001
Bescheid:	Bezirkshauptmannschaft Liezen
WB Nummer:	93
Standort:	9020 Klagenfurt am Wörthersee, Boltzmannstraße 8
Entstehung:	01.09.2000
Bescheid:	Magistrat der Stadt Klagenfurt
WB Nummer:	85
Standort:	9360 Friesach, Industriestraße 42
Entstehung:	12.02.2009
Bescheid:	Bezirkshauptmannschaft St. Veit an der Glan
WB Nummer:	45
Standort:	9500 Villach, Triglavstraße 9
Entstehung:	01.09.2000
Bescheid:	Magistrat der Stadt Villach
Einschränkung:	in der Form eines Industriebetriebes
WB Nummer:	43
Standort:	9710 Feistritz an der Drau, Bauhofweg 209
Entstehung:	01.09.2000
Bescheid:	Bezirkshauptmannschaft Villach-Land
Einschränkung:	Baumeister in Form eines Industriebetriebes
WB Nummer:	1
Standort:	9800 Spittal an der Drau, Molzbichler Straße 6
Entstehung:	20.01.2015
Bescheid:	Bezirkshauptmannschaft Spittal an der Drau
WB Nummer:	89
Standort:	9903 Oberlienz, Oberlienz 61
Entstehung:	01.09.2000
Bescheid:	Bezirkshauptmannschaft Lienz

REPUBLIK ÖSTERREICH
BUNDESMINISTERIUM FÜR WISSENSCHAFT, FORSCHUNG UND WIRTSCHAFT
@ AMTSSIGNATUR

Dieses Dokument wurde amtssigniert.

Informationen zur Prüfung des elektronischen Siegels bzw. der elektronischen Signatur finden Sie unter: https://www.signaturpruefung.gv.at/. Die Bildmarke und Hinweise zur Veröffentlichung eines Papierausdrucks sind auf https://www.bmwfw.gv.at/amtssignatur/ oder http://www.help.gv.at/ veröffentlicht.

VODOVOD I KANALIZACIJA DANILOVGRAD VIK

STRABAG
STRABAG AG

Standort:	8230 Hartberg, Ressavarstraße 24
Entstehung:	02.04.2001
Bescheid:	Bezirkshauptmannschaft Hartberg-Fürstenfeld

WB Nummer:	23
Standort:	8280 Fürstenfeld, Burgauer Straße 24 d
Entstehung:	16.11.2001
Bescheid:	Bezirkshauptmannschaft Hartberg-Fürstenfeld

WB Nummer:	98
Standort:	8330 Feldbach, Schillerstraße 2
Entstehung:	29.03.2016
Bescheid:	Bezirkshauptmannschaft Südoststeiermark

WB Nummer:	97
Standort:	8435 Wagna, Marktplatz 3
Entstehung:	22.01.2014
Bescheid:	Bezirkshauptmannschaft Leibnitz

WB Nummer:	3
Standort:	8443 Gleinstätten, Gleinstätten 15/13
Entstehung:	25.05.2001
Bescheid:	Bezirkshauptmannschaft Leibnitz

WB Nummer:	52
Standort:	8570 Voitsberg, Hauptplatz 4/I
Entstehung:	25.03.2005
Bescheid:	Bezirkshauptmannschaft Voitsberg

WB Nummer:	54
Standort:	8644 Mürzhofen, Wiener Straße 15
Entstehung:	03.04.2001
Bescheid:	Bezirkshauptmannschaft Bruck-Mürzzuschlag

WB Nummer:	34
Standort:	8700 Leoben, Kärntnerstraße 322
Entstehung:	01.09.2000
Bescheid:	Bezirkshauptmannschaft Leoben

FILIALGESCHÄFTSFÜHRER

Zuname:	Pöttler	
Vorname:	Dietwald	
geboren am.	06.01.1940	
Tag der Bestellung:	01.09.2000	bestellt durch: GI

WB Nummer:	56
Standort:	8740 Zeltweg, Schmiedgasse 14
Entstehung:	01.09.2000
Bescheid:	Bezirkshauptmannschaft Murtal

WB Nummer:	8
Standort:	8753 Fohnsdorf, Hauptstraße 91
Entstehung:	02.04.2001
Bescheid:	Bezirkshauptmannschaft Murtal

WB Nummer:	99
Standort:	8793 Trofaiach, Hauptstraße 42
Entstehung:	07.04.2016
Bescheid:	Bezirkshauptmannschaft Leoben

WB Nummer:	58
Standort:	8841 Frojach-Katsch, Katsch an der Mur 55

187

STRABAG
STRABAG AG

File ref. 020 Jv 542/17p-99a; KE 79/17
(Please indicate in all submissions)

JUSTIZ

CENTRAL PROSECUTION OFFICE
FOR THE PROSECUTION OF
ECONOMIC CRIMES AND CORRUPTION

Dampfschiffstrar..e 4
1030 Vienna

Phone: +43 (0)1 52152-5946
Fax: +43 (0)1 52152-5921
E-mail: wksta.leitung@justiz.gv.at

STRABAG AG
Prequalification
attn. Ms. Susanne Zeiler
Donau-City-Straße 9
1220 Vienna

Subject: Information from the Register for Associations

The Central Prosecution Office for the Prosecution of Economic Crimes and Corruption herewith informs you that so far the company

STRABAG AG

(FN 61689 w)

has not been convicted by a criminal court in Austria according to the electronic register of the automated judiciary system of proceedings, and criminal proceedings are currently pending against this company as an offender at Salzburg Public Prosecution Office under file ref. 5 ST 3/16d according to a name search in the automated judiciary system of proceedings.

Central Prosecution Office for the Prosecution of Economic Crimes and Corruption
Vienna, 01.02.2017
pp Mag. Roman REICH, LL.M., Senior Prosecutor

Correctness verified
The Head of the Department

[signed] [Round seal: Prosecution Office for Economic Crimes and Corruption]

VIK DANILOVGRAD

188

STRABAG
STRABAG AG

Wien PK Donaustadt

WAGRAMERSTR.89
1220 WIEN

Dient zur Vorlage bei
Strabag AG
Donau-City-Straße 9
1220 Wien

Geschäftszahl:
(Reference Number:) STRB 4404/dt/2017 SB

Strafregisterbescheinigung
(Criminal Record Certificate)

Akad. Grad vorangestellt: (Academic Degree in front of the name:)	Ing.
Vorname(n): (First Name:)	Theodor Christian
Familienname(n): (Surname:)	Klein
Akad. Grad nachgestellt: (Academic Degree behind the name:)	–
Geschlecht: (Gender:)	männlich male
Geburtsdatum: (Date of Birth:)	09.04.1953 (DD.MM.YYYY)
Geburtsort: (Place of Birth:)	Wien

Im Strafregister der Republik Österreich - geführt von der Landespolizeidirektion Wien - scheint keine Verurteilung auf.
(No convictions are listed in the criminal records database of the Republic of Austria, kept by the Federal Police Directorate of Vienna.)

DVR: 0003506
Tagesdatum (Date)/Uhrzeit (Time): 12.06.2017/12:35:39

Gebühr entrichtet

Republik Österreich * Landespolizeidirektion Wien 22

189

STRABAG
STRABAG AG

MGEM.ST.LEONHARD AM FORST

3243 ST.LEONHARD AM FORST

Dient zur Vorlage bei
STRABAG AG
-
Donau-City-Straße 9
1220 Wien

Geschäftszahl:
(Reference Number:) 012000/030/2017 SB

Strafregisterbescheinigung
(Criminal Record Certificate)

Akad. Grad vorangestellt: (Academic Degree in front of the name:)	---
Vorname(n): (First Name:)	Reinhard Josef
Familienname(n): (Surname:)	Kerschner
Akad. Grad nachgestellt: (Academic Degree behind the name:)	---
Geschlecht: (Gender:)	männlich male
Geburtsdatum: (Date of Birth:)	06.03.1966 (DD.MM.YYYY)
Geburtsort: (Place of Birth:)	Melk

Im Strafregister der Republik Österreich - geführt von der Landespolizeidirektion Wien - scheint keine Verurteilung auf.
(No convictions are listed in the criminal records database of the Republic of Austria, kept by the Federal Police Directorate of Vienna.)

DVR:	0003506
Tagesdatum (Date)/Uhrzeit (Time):	12.07.2017/11:31:15

MARKTGEMEINDE * ST. LEONHARD AM FORST *

190

Marktgemeinde St.Leonhard/F.
Bundesgebühr €
Verwaltungsabgabe € 3,10
Geb. Verz. Nr. A.P.1.7 - € 00,05
Datum: 12/7/17 Unterschrift:

STRABAG
STRABAG AG

D.O.O. VODOVOD I KANALIZACIJA VIK DANILOVGRAD

MGEM.LOOSDORF

EUROPAPL.11
3382 LOOSDORF BEZ.MELK

Dient zur Vorlage bei
STRABAG AG
Donau-City-Straße 9
1220 Wien

Geschäftszahl:
(Reference Number:) B-76/2017 SB

Strafregisterbescheinigung
(Criminal Record Certificate)

Akad. Grad vorangestellt: (Academic Degree in front of the name:)	---
Vorname(n): (First Name:)	Gerhard
Familienname(n): (Surname:)	Biswanger
Akad. Grad nachgestellt: (Academic Degree behind the name:)	---
Geschlecht: (Gender:)	männlich male
Geburtsdatum: (Date of Birth:)	12.08.1957 (DD.MM.YYYY)
Geburtsort: (Place of Birth:)	Wien

Im Strafregister der Republik Österreich - geführt von der Landespolizeidirektion Wien - scheint keine Verurteilung auf.
(No convictions are listed in the criminal records database of the Republic of Austria, kept by the Federal Police Directorate of Vienna.)

DVR: 0003506
Tagesdatum (Date)/Uhrzeit (Time): 25.07.2017/12:27:37

Marktgemeinde Loosdorf
Bezirk Melk

191

D.O.O. VODOVOD I KANALIZACIJA
VIK
DANILOVGRAD

STRABAG
STRABAG AG

STGEM.BADEN

HAUPTPL.1
2500 BADEN

Dient zur Vorlage bei
Strabag AG
Donau-City-Straße 9
1220 Wien

Geschäftszahl:
(Reference Number:) 3302/2017 SB

Strafregisterbescheinigung
(Criminal Record Certificate)

Akad. Grad vorangestellt: (Academic Degree in front of the name:)	---
Vorname(n): (First Name:)	Franz
Familienname(n): (Surname:)	Urban
Akad. Grad nachgestellt: (Academic Degree behind the name:)	---
Geschlecht: (Gender:)	männlich male
Geburtsdatum: (Date of Birth:)	20.01.1960 (DD.MM.YYYY)
Geburtsort: (Place of Birth:)	Steinfeld

Im Strafregister der Republik Österreich - geführt von der Landespolizeidirektion Wien - scheint keine Verurteilung auf.
(No convictions are listed in the criminal records database of the Republic of Austria, kept by the Federal Police Directorate of Vienna.)

DVR:	0003506
Tagesdatum (Date)/Uhrzeit (Time)	02.08.2017/07:33.57

STADTGEMEINDE BADEN 23 Verw.: Bez. BADEN

DER BÜRGERMEISTER
i.A.

HAMMERSCHICK

VIK DANILOVGRAD

192

STRABAG
STRABAG AG

Wien LPD SVA FB 2.2 Strafregisteramt

Schottenring 7-9
1010 Wien

Dient zur Vorlage bei
STRABAG AG
Donau City Strasse 9
1220 Wien

Geschäftszahl:
(Reference Number:) SRB20170731153221690 SB

Strafregisterbescheinigung
(Criminal Record Certificate)

Akad. Grad vorangestellt: (Academic Degree in front of the name:)	Ing. Mag.
Vorname(n): (First Name:)	Wolfgang
Familienname(n): (Surname:)	Zechmeister
Akad. Grad nachgestellt: (Academic Degree behind the name:)	—
Geschlecht: (Gender:)	männlich male
Geburtsdatum: (Date of Birth:)	10.09.1962 (DD.MM.YYYY)
Geburtsort: (Place of Birth:)	Grieskirchen

Im Strafregister der Republik Österreich - geführt von der Landespolizeidirektion Wien - scheint keine Verurteilung auf.
(No convictions are listed in the criminal records database of the Republic of Austria, kept by the Federal Police Directorate of Vienna.)

DVR: 0003506
Tagesdatum (Date)/Uhrzeit (Time): 01.08.2017/10:43:58

193

D.O.O. VODOVOD I KANALIZACIJA DANILOVGRAD

STRABAG
STRABAG AG

Wien LPD SVA FB 2.2 Strafregisteramt

Schottenring 7-9
1010 Wien

Dient zur Vorlage bei
STRABAG AG
Donau City Strasse 9
1220 Wien

Geschäftszahl:
(Reference Number:) SRB20170801083834821 SB

Strafregisterbescheinigung
(Criminal Record Certificate)

Akad. Grad vorangestellt: (Academic Degree in front of the name:)	Ing. Mag. rer. soc. oec.
Vorname(n): (First Name:)	Manfred
Familienname(n): (Surname:)	Rosenauer
Akad. Grad nachgestellt: (Academic Degree behind the name:)	—
Geschlecht: (Gender:)	männlich male
Geburtsdatum: (Date of Birth:)	11.04.1957 (DD.MM.YYYY)
Geburtsort: (Place of Birth:)	Linz

Im Strafregister der Republik Österreich - geführt von der Landespolizeidirektion Wien - scheint keine Verurteilung auf.
(No convictions are listed in the criminal records database of the Republic of Austria, kept by the Federal Police Directorate of Vienna.)

DVR:	0003506
Tagesdatum (Date)/Uhrzeit (Time):	01.08.2017/14:26:59

VODOVOD I KANALIZACIJA VIK DANILOVGRAD

STRABAG
STRABAG AG

Wien LPD SVA FB 2.2 Strafregisteramt

Schottenring 7-9
1010 Wien

Dient zur Vorlage bei
STRABAG AG
Donau City Strasse 9
1220 Wien

Geschäftszahl:
(Reference Number:) SRB20170704095307892 SB

Strafregisterbescheinigung
(Criminal Record Certificate)

Akad. Grad vorangestellt: (Academic Degree in front of the name:)	---
Vorname(n): (First Name:)	Markus
Familienname(n): (Surname:)	Engerth
Akad. Grad nachgestellt: (Academic Degree behind the name:)	---
Geschlecht: (Gender:)	männlich male
Geburtsdatum: (Date of Birth:)	01.06.1968 (DD.MM.YYYY)
Geburtsort: (Place of Birth:)	Wien

Im Strafregister der Republik Österreich - geführt von der Landespolizeidirektion Wien - scheint keine Verurteilung auf.
(No convictions are listed in the criminal records database of the Republic of Austria, kept by the Federal Police Directorate of Vienna.)

DVR: 0003506
Tagesdatum (Date)/Uhrzeit (Time): 04.07.2017/12:48:58

REPUBLIK ÖSTERREICH AMTSSIGNATUR

Datum/Zeit	2017-07-04T12:49:07+02:00
Aussteller-Zertifikat	a-sign-corporate-light-02
Serien-Nr.	1624172
Prüfinformation	Informationen zur Prüfung des elektronischen Siegels bzw. der elektronischen Signatur finden Sie unter: https://www.signaturpruefung.gv.at Eine Verifizierung des Ausdruckes kann bei der ausstellenden Behörde/Dienststelle erfolgen.
Hinweis	Dieses Dokument wurde amtssigniert.

195

VIK d.o.o. VODOVOD I KANALIZACIJA DANILOVGRAD

STRABAG
STRABAG AG

Wien LPD SVA FB 2.2 Strafregisteramt

Schottenring 7-9
1010 Wien

Dient zur Vorlage bei
STRABAG AG
Donau City Strasse 9
1220 Wien

Geschäftszahl:
(Reference Number:) SRB20170628120442396 SB

Strafregisterbescheinigung
(Criminal Record Certificate)

Akad. Grad vorangestellt: (Academic Degree in front of the name:)	—
Vorname(n): (First Name:)	**Marina**
Familienname(n): (Surname:)	**Humitsch**
Akad. Grad nachgestellt: (Academic Degree behind the name:)	—
Geschlecht: (Gender:)	**weiblich** **female**
Geburtsdatum: (Date of Birth:)	**28.08.1958** (DD.MM.YYYY)
Geburtsort: (Place of Birth:)	**Spittal an der Drau**

Im Strafregister der Republik Österreich - geführt von der Landespolizeidirektion Wien - scheint keine Verurteilung auf.
(No convictions are listed in the criminal records database of the Republic of Austria, kept by the Federal Police Directorate of Vienna.)

DVR: 0003506
Tagesdatum (Date)/Uhrzeit (Time): 28.06.2017/12:39:02

196

VIK DANILOVGRAD

STRABAG
STRABAG AG

MGEM.LOOSDORF

EUROPAPL.11
3382 LOOSDORF BEZ.MELK

Dient zur Vorlage bei
STRABAG AG
Donau-City-Straße 9
1220 Wien

Geschäftszahl:
(Reference Number:) K-75/2017 SB

Strafregisterbescheinigung
(Criminal Record Certificate)

Akad. Grad vorangestellt: (Academic Degree in front of the name:)	—
Vorname(n): (First Name:)	Gerald
Familienname(n): (Surname:)	Klenast
Akad. Grad nachgestellt: (Academic Degree behind the name:)	—
Geschlecht: (Gender:)	männlich male
Geburtsdatum: (Date of Birth:)	24.09.1965 (DD.MM.YYYY)
Geburtsort: (Place of Birth:)	Melk

Im Strafregister der Republik Österreich - geführt von der Landespolizeidirektion Wien - scheint keine Verurteilung auf.
(No convictions are listed in the criminal records database of the Republic of Austria, kept by the Federal Police Directorate of Vienna.)

DVR:	0003506
Tagesdatum (Date)/Uhrzeit (Time):	25.07.2017/12:25:11

Marktgemeinde Loosdorf
Bezirk Melk

197

STRABAG
STRABAG AG

Wien LPD SVA FB 2.2 Strafregisteramt

Schottenring 7-9
1010 Wien

Dient zur Vorlage bei
STRABAG AG
Donau City Strasse 9
1220 Wien

Geschäftszahl:
(Reference Number:) SRB20170724083549743 SB

Strafregisterbescheinigung
(Criminal Record Certificate)

Akad. Grad vorangestellt: (Academic Degree in front of the name:)	Mag.
Vorname(n): (First Name:)	Herbert
Familienname(n): (Surname:)	Krutina
Akad. Grad nachgestellt: (Academic Degree behind the name:)	—
Geschlecht: (Gender:)	männlich male
Geburtsdatum: (Date of Birth:)	14.07.1960 (DD.MM.YYYY)
Geburtsort: (Place of Birth:)	Wien

Im Strafregister der Republik Österreich - geführt von der Landespolizeidirektion Wien - scheint keine Verurteilung auf.
(No convictions are listed in the criminal records database of the Republic of Austria, kept by the Federal Police Directorate of Vienna.)

DVR:	0003506
Tagesdatum (Date)/Uhrzeit (Time):	24.07.2017/09:38:34

198

VODOVOD I KANALIZACIJA VIK DANILOVGRAD

STRABAG
STRABAG AG

Wien PK Donaustadt

WAGRAMERSTR.89
1220 WIEN

Dient zur Vorlage bei
Strabag AG
Donau City Strasse 9
1220 Wien

Geschäftszahl:
(Reference Number:) STRB 4924/dt/2017 SB

Strafregisterbescheinigung
(Criminal Record Certificate)

Akad. Grad vorangestellt: (Academic Degree in front of the name:)	Dipl.Ing.
Vorname(n): (First Name:)	Dragan
Familienname(n): (Surname:)	Pavelic
Akad. Grad nachgestellt: (Academic Degree behind the name:)	—
Geschlecht: (Gender:)	männlich male
Geburtsdatum: (Date of Birth:)	17.03.1956 (DD.MM.YYYY)
Geburtsort: (Place of Birth:)	Belgrad

Im Strafregister der Republik Österreich - geführt von der Landespolizeidirektion Wien - scheint keine Verurteilung auf.
(No convictions are listed in the criminal records database of the Republic of Austria, kept by the Federal Police Directorate of Vienna.)

DVR:	0003506
Tagesdatum (Date)/Uhrzeit (Time):	03.07.2017/12:44:23

Republik Österreich Landespolizeidirektion Wien

199

STRABAG
STRABAG AG

An das Finanzamt *(To the tax office)*

Finanzamt Klagenfurt
Siriusstraße 11
9020 Klagenfurt am Wörthersee

01.08.2017
DVR 0009571
Tel: 050 233 233

Steuernummer *(Tax identification number)*
57 022/4246

ANTRAG auf Bescheinigung, dass keine fälligen Abgabenforderungen vorliegen.
(Request Of Certification *that there are no payable tax claims.)*

Diese Bescheinigung dient zur Vorlage bei *(This certification serves tob e submitted to)*
Name, Anschrift *(Name, address)*

Präqualifikationen / Angebote

-- ---

Frau/Herrn/Firma *(Ms./Mr./Company name)*
Name, Anschrift *(Name, address)*

STRABAG AG
Ortenburgerstr 27
9800 Spittal an der Drau

Es wird bescheinigt, dass gegen die oben angeführte Person/Firma gegenwärtig keine fälligen Abgabenforderungen bestehen.
(It is certificated that currently no payable tax claims against the above-mentioned person/company are present.)

www.bmf.gv.at

BMF FINANZAMT

200

Verf 34a - FON Bundesministerium für Finanzen *(Federal Ministry of Finance)*

STRABAG
STRABAG AG

BMF BUNDESMINISTERIUM FÜR FINANZEN	Prüfhinweis	Informationen zur Prüfung des elektronischen Siegels bzw. der elektronischen Signatur finden Sie unter: https://amtssignatur.brz.gv.at/
	Datum/Zeit	2017-08-01T09:17:34+02:00
Unterzeichner	Finanzamt Klagenfurt	
Aussteller-Zertifikat	CN=a-sign-corporate-light-02,OU=a-sign-corporate-light-02,O=A-Trust Ges. f. Sicherheitssysteme im elektr. Datenverkehr GmbH,C=AT	
Serien-Nr.	985635	
Dokumentenhinweis	Dieses Dokument wurde amtssigniert.	

201

VODOVOD I KANALIZACIJA VIK DANILOVGRAD

STRABAG
STRABAG AG

KÄRNTNER GEBIETSKRANKENKASSE

GKK KÄRNTEN

Abteilung Beitragsprüfung-GPLA
Kempfstraße 8
9020 Klagenfurt am Wörthersee
Telefon: 050 5855-0
Fax: 050 5855-82850
http://www.kgkk.at

STRABAG AG
Ortenburger Straße 27
9800 Spittal an der Drau

ORIGINAL

Ihr Zeichen	Bezugszeichen	Sachbearbeiter/in	Datum
	16-2014-BE-BESTA-000ZZ	Robert Sobej	01.08.2017
	Bei Antwortschreiben bitte Bezugszeichen anführen!	DW: 2908	
		Beitragspruefung-GPLA@kgkk.at	

Beitragskontonummer: 2961490

Dieses Dokument wurde amtssigniert.
Informationen zur Prüfung des Ausdrucks:
http://www.sozialversicherung.at/amtssignatur

Bestätigung - STRABAG AG

Abgaben und gebührenfrei
gemäß §§ 109 und 110 ASVG

Ordnungsgemäße Entrichtung von Beiträgen zur gesetzlichen Sozialversicherung (Unbedenklichkeitsbescheinigung gem. §§ 68 und 72 des österreichischen Bundesvergabegesetzes 2006)

Unbedenklichkeitsbescheinigung

Die Kärntner Gebietskrankenkasse bestätigt, dass der im Betreff genannte Dienstgeber der Verpflichtung zur Bezahlung der Beiträge, vorbehaltlich allfälliger Nachrechnungen auf Grund einer gemeinsamen Prüfung aller lohnabhängigen Abgaben (GPLA), nachgekommen ist. Es bestehen keine Beitragsrückstände.

Certificate of Approval

The „Kärntner Gebietskrankenkasse" confirms that the above-mentioned employer has paid his social security contributions as laid down by law, subject to possible additional payments due to recalculation based on contribution audits. There are no contribution arrears.

Autocertificazione

La „Kärntner Gebietskrankenkasse" certifica che il datore di lavoro menzionato ha effettuato il pagamento dei contributi sociali e assicurativi previsti dalla legge, salvo ricalcolo dopo la verifica dei pagamenti contributivi e assicurativi versati. Non sussistono sospesi nel pagamento degli oneri sociali.

202

VIK DANILOVGRAD

STRABAG
STRABAG AG

Certificat de Régularité

Par la présente, la „Kärntner Gebietskrankenkasse“ confirme que l'employeur sus-mentionné a dûment rempli ses obligations de régler les contributions à l'assurance sociale, sous réserve d'éventuelles réclamations après audit. Il n'y a donc aucun arriéré.

Freundliche Grüße

Robert Sobej

203

STRABAG
STRABAG AG

STADTGEMEINDE
Spittal
AN DER DRAU

Municipal Council Spittal an der Drau
- Finance -
Burgplatz 5, A-9800 Spittal/Drau

To
STRABAG SE Präqualifikation
Construction Company
Donau-City-Straße 9
1220 Wien / Austria

Agent: Erich Pließnig
Phone no.: 04762/5650-137
Fax no.: 04762/5650-8137
E-mail: pliessnig@spittal-drau.at
Ref.: GB3/9000/2017/Pl.-

Spittal an der Drau, 01.08.2017

Re.: STRABAG AG;
Clearance Certificate

Dear Sir/Madam!

We officially inform you that all taxes and duties payable by the company **STRABAG AG**, Ortenburger Straße 27, 9800 Spittal an der Drau, have always been paid punctually and that there are no arrears whatsoever.

This Clearance Certificate has a validness of three month.

With kind regards!
For the Mayor:

Stadtgemeinde Spittal a.d. Drau 2

ppa.: Pließnig Erich m.p.

204

STRABAG
STRABAG AG

STADTGEMEINDE
Spittal
AN DER DRAU

A-9800 Spittal an der Drau, Burgplatz 5
Geschäftsbereich 3: Finanzen - Bildung
Dienststelle: Abgabeneinhebung/Buchhaltung

Spittal an der Drau, 01.08.2017

Firma
STRABAG AG
Konzernstabsbereich Contract Management
Gruppe Präqualifikation
Donau-City-Straße 9
1220 Wien

Sachbearbeiter: Herr Pließnig Erich
Telefonnr.: 04762/5650-137
Fax-Nummer: 04762/5650-8137
E-Mail: pliessnig@spittal-drau.at
Zahl: GB3/9000/2017/Pl.-

Betrifft: Unbedenklichkeitsbescheinigung

Für den Betrieb **STRABAG AG** mit Firmensitz in Spittal an der Drau, Ortenburger Straße 27, wird von Amts wegen mitgeteilt, dass alle Steuern und Abgaben termingerecht zur Einzahlung gebracht werden und derzeit keine Abgabenschuldigkeiten aushaften.

Diese Unbedenklichkeitsbescheinigung hat eine Gültigkeitsdauer von drei Monaten.

Mit freundlichen Grüßen!
Für den Bürgermeister:
i.A.:

Stadtgemeinde Spittal a.d.Drau 2

(Pließnig Erich)

205

STRABAG
STRABAG AG

WKO
Die Bauindustrie

Fachverband der Bauindustrie
Wirtschaftskammer Österreich
Schaumburgergasse 20 | 1040 Wien
T +43 (0)5 90900-5222 | F +43 (0)5 90900-5223
E office@bau.or.at
W www.bau.or.at

CERTIFICATE

Vienna, 01.08.2017

This is to certify, that the company

STRABAG AG
Donau-City-Straße 9, 1220 Vienna
Company register number: FN 61689 w

is a member of the Austrian Construction Industry Association and holds a business license for the master builder business in the form of an industrial company.

The company is therefore equally qualified to plan, calculate, manage and conduct construction and demolition projects in the fields of civil and structural engineering. Further entitlements include but are not limited to developing, leading, monitoring and managing projects as well as being responsible for construction management.

Based on the Database of Official Publications of the Ministry of Justice it can be confirmed that the company is not in a state of insolvency.

The Austrian Construction Industry Association

Wirtschaftskammer Österreich • Fachverband d. Bauindustrie

Michael Steibl
Managing Director

206

DVR:0266914

20170801-BTG-Strabag W...

STRABAG
STRABAG AG

STRABAG – Organization chart (Extract) 06.12.2016

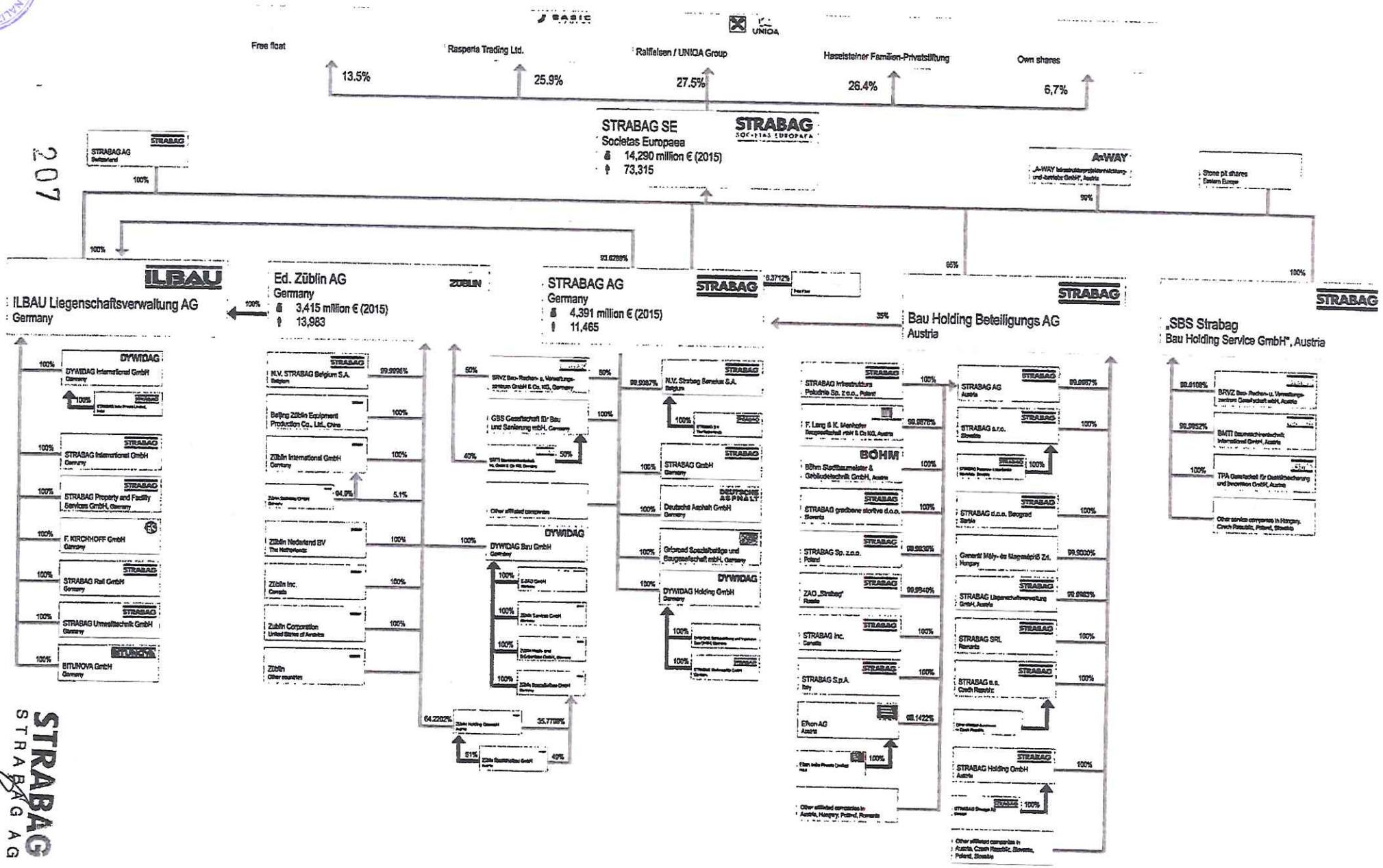

STRABAG AG

STRABAG AG

Ortenburgerstraße 27
A-9800 Spittal/Drau, Austria

Telefon +43(0) / 4762-620-0
Telefax +43(0) / 4762-4962
www.strabag.com

STRABAG

D.O.O. "Vodovod i kanalizacija" Danilovgrad
Caja Scepanovica bb Danilovgrad
81410 State of Montenegro

Power of Attorney

We, the undersigned, acting in our capacity as Members of the Board or Authorised Representatives and as such being duly authorized to represent STRABAG AG, an Austrian company incorporated in accordance with the laws of the Federal Republic of Austria, registered at the Austrian Commercial Register under No. FN 61689w at the Provincial Court of Klagenfurt and with its company seat and business address at A-9800 Spittal/Drau, Ortenburgerstrasse 27, do hereby authorize:

Mr. Željko Leković
Passport No.: J56DN0632
born on 16/9/1961
resident in IV Proleteske S28, Cetinje, Montenegro

who signs as follows .....,

who put initials as follows .....,

to sign and act for and on behalf of and represent STRABAG AG in all matters pertaining to the tender procedures and all related documents and later to act as a contact person in case of award for the following project:

REHABILITATION OF EXISTING AND CONSTRUCTION OF NEW SEWERS;
Tender No: EBRD ME DAN 9000
Procurement ref: 8733-IFT-41252

His signature shall be legally binding.

STRABAG AG

.....
Marina Humitsch

STRABAG
STRABAG AG

STRABAG AG

.....
Franz Urban

Vienna, 22.08.2017

208

STRABAG
STRABAG AG

Gebühr in Höhe von € 14,30 entrichtet.
Dr. Elisabeth Neuwirth, öff. Notarin,
Wien-Neubau III

Fee € 14,30 paid.
Dr. Elisabeth Neuwirth, notary public,
Vienna-Neubau III

B.R.Zl.: 1480/17

Ich bestätige die Echtheit der Firmazeichnungen ----------

a) der Frau Marina **HUMITSCH**, geboren am 28.08.1958 (achtundzwanzigsten August neunzehnhundertachtundfünfzig), in ihrer Eigenschaft als kollektiv vertretungsbefugtes Vorstandsmitglied, und ----------

b) des Herrn Franz **URBAN**, geboren am 20.01.1960 (zwanzigsten Jänner neunzehnhundertsechzig), in seiner Eigenschaft als kollektiv vertretungsbefugtes Vorstandsmitglied, ----------

je der **STRABAG AG** mit dem Sitz in Spittal an der Drau und der Geschäftsanschrift 9800 Spittal an der Drau, Ortenburgerstraße 27. ----------

Gleichzeitig bestätige ich gemäß § 89a (Paragraph neunundachtzig a) der Notariatsordnung auf Grund der heute im elektronischen Weg vorgenommenen Einsicht in das Firmenbuch, dass Herr Franz Urban und Frau Marina Humitsch am 22.08.2017 (zweiundzwanzigsten August zweitausendsiebzehn) berechtigt waren und heute noch berechtigt sind, die unter FN 61689w eingetragene STRABAG AG gemeinsam rechtsverbindlich zu zeichnen. ----------

Wien, am 24.08.2017 (vierundzwanzigsten August zweitausendsiebzehn). ----------

---

I herewith certify the authenticity of the signatures of ----------

a) Misses Marina **HUMITSCH**, born 28.08.1958 (August twentyeighth, nineteenhundredfiftyteight), in her capacity as jointly authorised member of the board of directors, and ----------

b) Mister Franz **URBAN**, born 20.01.1960 (January twentieth, nineteenhundredsixty), in his capacity as jointly authorised member of the board of directors, ----------

each of **STRABAG AG** having its registered office at Spittal an der Drau and its business address at 9800 Spittal an der Drau, Ortenburgerstraße 27. ----------

Pursuant to today's inspection of the register of companies, I certify in accordance with section eighty-nine a of the Regulations for Notaries public that Misses Marina Humitsch and Mister Franz Urban were authorised on 22.08.2017 (August twentysecond, two-thousandseventeen) and are authorised today to jointly represent the said STRABAG AG registered under company number 61689w. ----------

Vienna, this 24.08.2017 (August twentyfourth, twothousandseventeen). ----------

209

Dr. Elisabeth NEUWIRTH ÖFFENTLICHE NOTARIN

öffentliche Notarin
notary public

STRABAG

Dr. Elisabeth NEUWIRTH
ÖFFENTLICHE NOTARIN
Wien - Neubau

Form ELI - 2: JVCA Information Sheet

Each member of a JVCA must fill in this form

1.1.1.1.2 JVCA / Specialist Subcontractor Information	
Tenderer's legal name	
JVCA Partner's or Subcontractor's legal name	
JVCA Partner's or Subcontractor's country of constitution	
JVCA Partner's or Subcontractor's year of constitution	
JVCA Partner's or Subcontractor's legal address in country of constitution	
JVCA Partner's or Subcontractor's authorized representative information (name, address, telephone numbers, fax numbers, e-mail address)	

Attached are copies of the following original documents.

- ☐ 1. Articles of incorporation or constitution of the legal entity named above, in accordance with ITT, Clause 3.
- ☐ 2. Authorization to represent the firm named above, in accordance with ITT 10.2.
- ☐ 3. In the case of government-owned entity, documents establishing legal and financial autonomy and compliance with commercial law, in accordance with ITT, Clause 3.

Form ELI - 2: JVCA Information Sheet

Each member of a JVCA must fill in this form

1.1.1.1.1 JVCA / Specialist Subcontractor Information	
Tenderer's legal name	STRABAG AG
JVCA Partner's or Subcontractor's legal name	IWA CONSALT d.o.o (as Subcontractor)
JVCA Partner's or Subcontractor's country of constitution	Serbia
JVCA Partner's or Subcontractor's year of constitution	1999.
JVCA Partner's or Subcontractor's legal address in country of constitution	Anastasa Jovanovica 3, 11000 Belgrade, Serbia
JVCA Partner's or Subcontractor's authorized representative information (name, address, telephone numbers, fax numbers, e-mail address)	Milan Ivetic, Anastasa Jovanovica 3, +381 62 804 45 22 mivetic@iwa-cons.com

Attached are copies of the following original documents.

☒ 1. Articles of incorporation or constitution of the legal entity named above, in accordance with ITT, Clause 3.

☐ 2. Authorization to represent the firm named above, in accordance with ITT 10.2.

☐ 3. In the case of government-owned entity, documents establishing legal and financial autonomy and compliance with commercial law, in accordance with ITT, Clause 3.

211

STRABAG
STRABAG AG

На основу члана 106. а у вези члана 152 ст.2 Закона о привредним друштвима („Сл. гласник РС" бр. 125 од 22. новембра 2004. године) оснивач једночланог друштва са ограниченом одговорношћу Милан Иветић из Београда,ул.Хаџи Милентијева бр.1,ЈМБГ 0208954773620 дана 28.10. 2008 године доноси следећу :

ОДЛУКУ О ОРГАНИЗОВАЊУ ДРУШТВА СА ОГРАНИЧЕНОМ ОДГОВОРНОШЋУ IWA CONSALT DOO БЕОГРАД РАДИ УСКЛАЂИВАЊА СА ЗАКОНОМ О ПРИВРЕДНИМ ДРУШТВИМА

Члан 1.

Оснивач предузећа IWA CONSALT DOO Београд,које је основано 6.12.1999 год. и уписано у регистар Трговинског суда у Београду рег.уложак 1-82397-00 и преведено у регистар привредних субјеката Решењем БД 50750/05,овом одлуком усклађује друштво са одредбама Закона о привредним друштвима,те се овим одредбама замењују у целини одредбе одлуке о оснивању предузећа од 6.12.1999 год.,те престају да важе и сви други акти предузећа који нису у складу са овим законом.

Члан 2.

Овом Одлуком се уређује:

- пословно име и седиште друштва;
- претежна делатност друштва;
- вредност основног капитала друштва, односно вредност улога оснивача;
- начин и време уплате новчаног улога, односно уношење неновчаног улога;
- укупан износ трошкова оснивања друштва;
- врста и надлежности органа друштва;
- заступање друштва;
- начин промене правне форме друштва;
- трајање и престанак друштва;
- остала питања.

Члан 3.

Пуно пословно име друштва гласи: ПРЕДУЗЕЋЕ ЗА ПРОЈЕКТОВАЊЕ,ИНЖЕЊЕРИНГ И КОНСАЛТИНГ IWA CONSALT DOO Београд,Хаџи Милентијева бр.1

Скраћено пословно име Друштва гласи: IWA CONSALT DOO Београд

Члан 4.

Седиште Друштва је на следећој адреси: Београд,Хаџи Милентијева бр.1

STRABAG
STRABAG AG

Члан 5.

Претежна делатност којом ће се Друштво бавити је:
- 74140 КОНСАЛТИНГ И МЕНАЏМЕНТ ПОСЛОВИ

Друштво може обављати и друге делатности, укључујући и спољнотрговинску делатност, уколико за то испуњава услове предвиђене законом.

Члан 6.

Укупан уписани новчани део основног капитала Друштва износи: 5.648,44 ЕУР (словима: пет хиљада шесто четрдесет осам евра и четрдесет четири цента) у динарској противвредности, по средњем курсу НБ Србије, важећем на дан уплате.

Укупан уплаћени новчани део основног капитала Друштва износи 2.824,22 ЕУР (словима: две хиљаде осмасто двадесет четири евра и двадесет два цента) у динарској противвредности, по средњем курсу НБ Србије, важећем на дан уплате.

Преостали неуплаћени, односно неунети улог биће уплаћен, односно унет, у року од две године од дана регистрације Друштва у Регистар привредних субјекта.

Члан 7.

Оснивач Друштва, односно његов једини члан је:

Милан Иветић, улица Хаџи Милентијева бр.1/21, ЈМБГ 0208954773620

Члан 8.

Члан Друштва има право на исплату добити, у складу са законом.

Члан 9.

У правном промету са трећим лицима Друштво иступа у своје име и за свој рачун.

STRABAG
STRABAG AG

За обавезе према трећим лицима, настале у пословању Друштва, Друштво одговара својом целокупном имовином.

Члан Друштва не одговара за обавезе Друштва, осим до износа неунетог улога у имовину друштва и у другим случајевима предвиђеним законом.

Члан 10.

Друштво у унутрашњем и спољнотрговинском промету заступа директор Друштва, са неограниченим овлашћењима.

За директора друштва именује се:

Милан Иветић из Београда, улица Хаџи Милентијева бр1/21. ЈМБГ 0208954773620

ОРГАНИ ДРУШТВА

Члан 11.

Органи Друштва су скупштина, директор или управни одбор.

Њихова овлашћења и делокруг рада утврђују се Законом о привредним друштвима.

Члан 12.

Послове који по Закону о привредним друштвима спадају у делокруг Скупштине врши члан Друштва, пошто се ради о једночланом друштву.

Члан Друштва одлучује о:

1) одобравању послова закључених у вези са оснивањем друштва пре регистрације;
2) избору и разрешењу директора и утврђивању његове зараде;
3) одобравању финансијских извештаја;
4) времену и износу исплате добити члану друштва;
5) именовању интерног ревизора или ревизора друштва и потврђивању њихових налаза и мишљења, утврђивању накнаде или других услова њиховог уговора са друштвом;
6) именовању ликвидационог управника и потврђивању ликвидационог биланса;
7) повећању и смањењу основног капитала друштва и емисији хартија од вредности;
8) давању прокуре и пословног пуномоћја;

STRABAG
STRABAG AG

9) пријему новог члана и преносу удела на трећа лица;
10) статусним променама, промени правне форме и престанку друштва;
11) одобрењу правних послова директора и других лица, у складу са чланом 35. Закона о привредним друштвима;
12) стицању, продаји, давању у закуп, залагању или другом располагању имовином велике вредности, у складу са Закон о привредним друштвима;
13) измени оснивачког акта или уговора чланова друштва;
14) образовању огранка Друштва;
15) промени пословног имена Друштва;
16) давању и опозивању прокуре.

Члан 13.

Оснивачким актом друштва се одлучује да ли друштво има директора или управни одбор.

Директор друштва може бити члан друштва или лице које није члан друштва.

Чланови управног одобра друштва могу бити сви чланови друштва или друга лица.

Члан друштва бира директора или чланове управног одбора на седници скупштине, осим првог директора или чланова управног одбора који могу бити одређени оснивачким актом.

Управни одбор друштва има председника управног одбора, кога бирају чланови друштва већином, ако актом о оснивању није одређена друга већина.

Председник управног одбора заступа друштво, сазива и председава седницама управног одбора и одговоран је за вођење записника.

Члан 14.

Директор Друштва надлежан је за:

1) заступање друштва и вођење послова друштва у складу са законом и овим оснивачким актом.
2) утврђивање предлога пословног плана
3) сазивање седнице скупштине чланова
4) спровођење одлука оснивача
5) одређивање дана са којим се утврђује листа чланова друштва са правом на обавештавање, дан утврђивања дивиденде и дан плаћања дивиденде, гласања и других питања.
6) закључење уговора о кредиту

STRABAG
STRABAG AG

учешћа

7) утврђивање дана стицања права на учешће у добити и дана исплате добити, као и дана стицања права гласа и других права чланова друштва.
8) давање и опозивање прокуре

Директор или управни одбор одговоран је за уредно вођење пословних књига и унутрашњи надзор пословања.

Директор или управни одбор може вршење појединих послова из ст. 1. и 2. овог члана пренети на друга лица, ако то овим оснивачким актом није искључено.

Члан 15.

Друштво се оснива на неодређено време.

Друштво престаје одлуком члана Друштва или у другим случајевима предвиђеним законом.

Члан 16.

На сва питања која нису регулисана овим Актом о оснивању, примењиваће се Закон о привредним друштвима.

Члан 17.

Измене овог Акта о оснивању врше се у писаној форми.

Овај Акт о оснивању је састављен у четири истоветна примерка, један за поступак регистрације, два за члана Друштва, један за суд овере.

Ова Акт о оснивању ступа на снагу даном овере од стране надлежног суда.

У Београду 28.10.2008 године.

Оснивач Друштва :

ПЕТИЋ МИЛАН

216

STRABAG
STRABAG AG

I/2Ov. br.11747/ 2008

Potvrdjuje se da je/ su danas pred sudom potpisao/li ovu ispravu
i potpis na ovoj ispravi priznao/li za svoj
Milan Ivetić iz Beograda.
Identitet lica utvrdjen je na osnovu **lične karte** upisane u upisnik overe.
Taksa za overu u iznosu od 1332,50 naplaćena je.

TREĆI OPŠTINSKI SUD U BEOGRADU

Dana 16.12.2008. godine,

Referent overe

STRABAG
STRABAG AG

Form CON - 2: Historical Contract Non-Performance

[The following table shall be filled in for the Tenderer and for each partner of a Joint Venture]

Tenderer's Legal Name: STRABAG AG AUSTRIA

Date: 06/9/2017
Joint Venture Party Legal Name:

Tender Ref. and title: EBRD ME DAN 9000
Page 1 of 1 pages

Non-Performing Contracts in accordance with Tender Data, Para 3.2 (Qualifying requirement), Clause 3.2.2.			
☒ Contract non-performance did not occur during the 5 years specified in Attachment I - Tenderers Qualification Criteria, Table 2.2., Sub-Factor 2.2.1.			
☐ Contract(s) not performed during the 5 years specified in Attachment I - Tenderers Qualification, Table 2.2., Sub-Factor 2.2.1			
Year	**Non performed portion of contract**	**Contract Identification**	**Total Contract Amount (current value, EURO equivalent)**
		Contract Identification: Name of Employer: Address of Employer: Reason(s) for non performance:	
Pending Litigation, in accordance with Tender Data, Para 3.2 (Qualifying requirement), Clause 3.2.2.			
☒ No pending litigation in accordance with Attachment I - Tenderers Qualification Criteria, Table 2.2., Sub-Factor 2.2.2.			
☐ Pending litigation in accordance with Attachment I - Tenderers Qualification Criteria, Table 2.2., Sub-Factor 2.2.2.			
Year	**Outcome as Percentage of Total Assets**	**Contract Identification**	**Total Contract Amount (current value, EURO equivalent)**
		Contract Identification: Name of Employer: Address of Employer: Matter in dispute:	

-PLEASE SEE THE ATTACHMENT

218

STRABAG
STRABAG AG

STRABAG AG

Ortenburgerstraße 27
A-9800 Spittal/Drau, Austria

Telefon +43 4762 620-0
Telefax +43 4762-4962
www.strabag.com

STRABAG

D.O.O. "Vodovod i kanalizacija" Danilovgrad
Caja Scepanovica bb Danilovgrad
81410 State of Montenegro

Project: REHABILITATION OF EXISTING AND CONSTRUCTION OF NEW SEWERS;
Tender No: EBRD ME DAN 9000, Procurement ref: 8733-IFT-41252

Litigation History

We, the undersigned, acting in our capacity as Members of Board or Authorized Representatives and as such being duly authorized to represent STRABAG AG, an Austrian company incorporated in accordance with the laws of the Federal Republic of Austria, registered at the Austrian Commercial Register under No. FN 61689w at the Provincial Court of Klagenfurt and with its company seat and business address at A-9800 Spittal/Drau, Ortenburgerstraße 27, do hereby declare that:

due to the size of the company (sales 2016: EUR 2.098,55 Mio.), STRABAG AG is currently conducting several lawsuits.
These cases primarily concern minor litigations with suppliers and subcontractors whose performance were not satisfactory. The company, however, is neither conducting any lawsuits with clients in connection with comparable projects, nor are any major lawsuits pending against STRABAG AG.

If you require more specific information, please contact us:

c/o CML Construction Services GmbH
Mag. M. Đenadić
Donau-City-Strasse 9
1220 Vienna, Austria
Phone: +43 1 22422 1080
Fax: +43 1 22422 1074

STRABAG AG

Marina Humitsch

STRABAG
STRABAG AG

STRABAG AG

Franz Urban

Vienna, 22.08.2017

219

STRABAG
STRABAG AG

Form FIN - 1: Financial Situation

Each Tenderer or member of a JVCA must fill in this form

Information from Balance Sheet

	Financial Data for Previous 3 Years [EURO Equivalent]		
	2014	2015	2016
Total Assets	1715	1637	1.677
Total Liabilities	1069	980	998
Net Worth	645	656	679
Current Assets	997	960	939
Current Liabilities	702	609	628

Information from Income Statement

Total Revenues	1874	2024	2.096
Profits Before Taxes	9	9	8
Profits After Taxes	**11,36 Mio**	**7,53 Mio**	**22,17 Mio**

☒ Attached are copies of financial statements (balance sheets including all related notes, and income statements) for the last three years, as indicated above, complying with the following conditions.

- All such documents reflect the financial situation of the Tenderer or partner to a JVCA, and not sister or parent companies.
- Historic financial statements must be audited by a certified accountant.
- Historic financial statements must be complete, including all notes to the financial statements.
- Historic financial statements must correspond to accounting periods already completed and audited (no statements for partial periods shall be requested or accepted).

-PLEASE SEE THE ATTACHMENT-

STRABAG
STRABAG AG

KPMG

STRABAG AG,
Spittal an der Drau

Bericht über die Prüfung des Jahresabschlusses zum 31. Dezember 2016

D.O.O. "VODOVOD I KANALIZACIJA" DANILOVGRAD VIK

STRABAG
STRABAG AG

4. Bestätigungsvermerk

Bericht zum Jahresabschluss

Prüfungsurteil

Wir haben den Jahresabschluss der

STRABAG AG,
Spittal an der Drau,

bestehend aus der Bilanz zum 31. Dezember 2016, der Gewinn- und Verlustrechnung für das an diesem Stichtag endende Geschäftsjahr und dem Anhang, geprüft.

Nach unserer Beurteilung entspricht der Jahresabschluss den gesetzlichen Vorschriften und vermittelt ein möglichst getreues Bild der Vermögens- und Finanzlage zum 31. Dezember 2016 sowie der Ertragslage der Gesellschaft für das an diesem Stichtag endende Geschäftsjahr in Übereinstimmung mit den österreichischen unternehmensrechtlichen Vorschriften.

Grundlage für das Prüfungsurteil

Wir haben unsere Abschlussprüfung in Übereinstimmung mit den österreichischen Grundsätzen ordnungsgemäßer Abschlussprüfung durchgeführt. Diese Grundsätze erfordern die Anwendung der International Standards on Auditing (ISA). Unsere Verantwortlichkeiten nach diesen Vorschriften und Standards sind im Abschnitt "Verantwortlichkeiten des Abschlussprüfers für die Prüfung des Jahresabschlusses" unseres Bestätigungsvermerks weitergehend beschrieben. Wir sind von der Gesellschaft unabhängig in Übereinstimmung mit den österreichischen unternehmensrechtlichen und berufsrechtlichen Vorschriften und wir haben unsere sonstigen beruflichen Pflichten in Übereinstimmung mit diesen Anforderungen erfüllt. Wir sind der Auffassung, dass die von uns erlangten Prüfungsnachweise ausreichend und geeignet sind, um als Grundlage für unser Prüfungsurteil zu dienen.

Verantwortlichkeiten der gesetzlichen Vertreter und des Aufsichtsrats für den Jahresabschluss

Die gesetzlichen Vertreter sind verantwortlich für die Aufstellung des Jahresabschlusses und dafür, dass dieser in Übereinstimmung mit den österreichischen unternehmensrechtlichen Vorschriften ein möglichst getreues Bild der Vermögens-, Finanz- und Ertragslage der Gesellschaft vermittelt. Ferner sind die gesetzlichen Vertreter verantwortlich für die internen Kontrollen, die sie als notwendig erachten, um die Aufstellung eines Jahresabschlusses zu ermöglichen, der frei von wesentlichen – beabsichtigten oder unbeabsichtigten – falschen Darstellungen ist.

Bei der Aufstellung des Jahresabschlusses sind die gesetzlichen Vertreter dafür verantwortlich, die Fähigkeit der Gesellschaft zur Fortführung der Unternehmenstätigkeit zu beurteilen, Sachverhalte im Zusammenhang mit der Fortführung der Unternehmenstätigkeit – sofern einschlägig – anzugeben sowie dafür, den Rechnungslegungsgrundsatz der Fortführung der Unternehmenstätigkeit anzuwenden, es sei denn, die gesetzlichen Vertreter beabsichtigen, entweder die Gesellschaft zu liquidieren oder die Unternehmenstätigkeit einzustellen, oder haben keine realistische Alternative dazu.

Der Aufsichtsrat ist verantwortlich für die Überwachung des Rechnungslegungsprozesses der Gesellschaft.

Verantwortlichkeiten des Abschlussprüfers für die Prüfung des Jahresabschlusses

Unsere Ziele sind, hinreichende Sicherheit darüber zu erlangen, ob der Jahresabschluss als Ganzes frei von wesentlichen – beabsichtigten oder unbeabsichtigten – falschen Darstellungen ist und einen Bestätigungsvermerk zu erteilen, der unser Prüfungsurteil beinhaltet. Hinreichende Sicherheit ist ein hohes Maß an Sicherheit, aber keine Garantie dafür, dass eine in Übereinstimmung mit den österreichischen Grundsätzen ordnungsgemäßer Abschlussprüfung, die die Anwendung der ISA erfordern, durchgeführte Abschlussprüfung eine wesentliche falsche Darstellung, falls eine solche vorliegt, stets aufdeckt. Falsche Darstellungen können aus dolosen Handlungen oder Irrtümern resultieren und werden als wesentlich angesehen, wenn von ihnen einzeln oder insgesamt vernünftigerweise erwartet werden könnte, dass sie die auf der Grundlage dieses Jahresabschlusses getroffenen wirtschaftlichen Entscheidungen von Nutzern beeinflussen.

Als Teil einer Abschlussprüfung in Übereinstimmung mit den österreichischen Grundsätzen ordnungsgemäßer Abschlussprüfung, die die Anwendung der ISA erfordern, üben wir während der gesamten Abschlussprüfung pflichtgemäßes Ermessen aus und bewahren eine kritische Grundhaltung.

Darüber hinaus gilt:

- Wir identifizieren und beurteilen die Risiken wesentlicher – beabsichtigter oder unbeabsichtigter – falscher Darstellungen im Abschluss, planen Prüfungshandlungen als Reaktion auf diese Risiken, führen sie durch und erlangen Prüfungsnachweise, die ausreichend und geeignet sind, um als Grundlage für unser Prüfungsurteil zu dienen. Das Risiko, dass aus dolosen Handlungen resultierende wesentliche falsche Darstellungen nicht aufgedeckt werden, ist höher als ein aus Irrtümern resultierendes, da dolose Handlungen betrügerisches Zusammenwirken, Fälschungen, beabsichtigte Unvollständigkeiten, irreführende Darstellungen oder das Außerkraftsetzen interner Kontrollen beinhalten können.
- Wir gewinnen ein Verständnis von dem für die Abschlussprüfung relevanten internen Kontrollsystem, um Prüfungshandlungen zu planen, die unter den gegebenen Umständen angemessen sind, jedoch nicht mit dem Ziel, ein Prüfungsurteil zur Wirksamkeit des internen Kontrollsystems der Gesellschaft abzugeben.
- Wir beurteilen die Angemessenheit der von den gesetzlichen Vertretern angewandten Rechnungslegungsmethoden sowie die Vertretbarkeit der von den gesetzlichen Vertretern dargestellten geschätzten Werte in der Rechnungslegung und damit zusammenhängende Angaben.

VIK DANILOVGRAD

223

STRABAG
STRABAG AG

— Wir ziehen Schlussfolgerungen über die Angemessenheit der Anwendung des Rechnungslegungsgrundsatzes der Fortführung der Unternehmenstätigkeit durch die gesetzlichen Vertreter sowie, auf der Grundlage der erlangten Prüfungsnachweise, ob eine wesentliche Unsicherheit im Zusammenhang mit Ereignissen oder Gegebenheiten besteht, die bedeutsame Zweifel an der Fähigkeit der Gesellschaft zur Fortführung der Unternehmenstätigkeit aufwerfen kann. Falls wir die Schlussfolgerung ziehen, dass eine wesentliche Unsicherheit besteht, sind wir verpflichtet, in unserem Bestätigungsvermerk auf die dazugehörigen Angaben im Jahresabschluss aufmerksam zu machen oder, falls diese Angaben unangemessen sind, unser Prüfungsurteil zu modifizieren. Wir ziehen unsere Schlussfolgerungen auf der Grundlage der bis zum Datum unseres Bestätigungsvermerks erlangten Prüfungsnachweise. Zukünftige Ereignisse oder Gegebenheiten können jedoch die Abkehr der Gesellschaft von der Fortführung der Unternehmenstätigkeit zur Folge haben.

— Wir beurteilen die Gesamtdarstellung, den Aufbau und den Inhalt des Jahresabschlusses einschließlich der Angaben sowie ob der Jahresabschluss die zugrunde liegenden Geschäftsvorfälle und Ereignisse in einer Weise wiedergibt, dass ein möglichst getreues Bild erreicht wird.

— Wir tauschen uns mit dem Aufsichtsrat unter anderem über den geplanten Umfang und die geplante zeitliche Einteilung der Abschlussprüfung sowie über bedeutsame Prüfungsfeststellungen, einschließlich etwaiger bedeutsamer Mängel im internen Kontrollsystem, die wir während unserer Abschlussprüfung erkennen, aus.

Bericht zum Lagebericht

Der Lagebericht ist auf Grund der österreichischen unternehmensrechtlichen Vorschriften darauf zu prüfen, ob er mit dem Jahresabschluss in Einklang steht und ob er nach den geltenden rechtlichen Anforderungen aufgestellt wurde.

Die gesetzlichen Vertreter sind verantwortlich für die Aufstellung des Lageberichtes in Übereinstimmung mit den österreichischen unternehmensrechtlichen Vorschriften.

Wir haben unsere Prüfung in Übereinstimmung mit den Berufsgrundsätzen zur Prüfung des Lageberichtes durchgeführt.

Urteil

Nach unserer Beurteilung ist der Lagebericht nach den geltenden rechtlichen Anforderungen aufgestellt worden und steht in Einklang mit dem Jahresabschluss.

224

STRABAG
STRABAG AG

Erklärung

Angesichts der bei der Prüfung des Jahresabschlusses gewonnenen Erkenntnisse und des gewonnenen Verständnisses über die Gesellschaft und ihr Umfeld wurden wesentliche fehlerhafte Angaben im Lagebericht nicht festgestellt.

Linz, am 4. April 2017

KPMG Austria GmbH
Wirtschaftsprüfungs- und Steuerberatungsgesellschaft

Mag. Ernst Pichler
Wirtschaftsprüfer

Die Veröffentlichung oder Weitergabe des Jahresabschlusses mit unserem Bestätigungsvermerk darf nur in der von uns bestätigten Fassung erfolgen. Dieser Bestätigungsvermerk bezieht sich ausschließlich auf den deutschsprachigen und vollständigen Jahresabschluss samt Lagebericht. Für abweichende Fassungen sind die Vorschriften des § 281 Abs 2 UGB zu beachten.

STRABAG
STRABAG AG

226

Bilanz zum 31. Dezember 2016

Aktiva

	31.12.2016 EUR	31.12.2015 TEUR
A. Anlagevermögen:		
I. Immaterielle Vermögensgegenstände:		
1. Konzessionen, gewerbliche Schutzrechte und ähnliche Rechte und Vorteile sowie daraus abgeleitete Lizenzen	15.269,79	15
2. Firmenwert	92.602,32	107
3. Geleistete Anzahlungen	332.124,00	200
	439.996,11	322
II. Sachanlagen:		
1. Grundstücke, grundstücksgleiche Rechte und Bauten, einschließlich der Bauten auf fremdem Grund	*37.086.354,82*	34.158
2. Technische Anlagen und Maschinen	*37.587.510,50*	40.607
3. Andere Anlagen, Betriebs- und Geschäftsausstattung	*35.293.505,96*	34.078
4. Geleistete Anzahlungen und Anlagen in Bau	*2.526.340,00*	1.532
	112.493.711,28	110.373
III. Finanzanlagen:		
1. Anteile an verbundenen Unternehmen	*564.016.279,48*	490.492
2. Ausleihungen an verbundene Unternehmen	*0,07*	0
3. Beteiligungen	*31.404.076,22*	47.338
4. Ausleihungen an Unternehmen, mit denen ein Beteiligungsverhältnis besteht	*5.288.568,00*	5.289
5. Wertpapiere (Wertrechte) des Anlagevermögens	*22.951.875,46*	22.952
6. Sonstige Ausleihungen	*64.975,52*	65
	623.725.774,77	566.136
	736.659.482,16	676.831
B. Umlaufvermögen:		
I. Nicht fertig gestellte Bauarbeiten abzüglich erhaltene Anzahlungen	1.105.224.289,67	1.386.425
	-1.020.298.167,34	-1.281.260
	84.926.122,33	105.165
II. Vorräte:		
1. Roh-, Hilfs- und Betriebsstoffe	23.394.619,33	22.809
2. Noch nicht abgerechnete Leistungen	14.984.362,52	11.521
3. Grundstücke mit nicht fertig gestellten Bauten abzüglich erhaltene Anzahlungen	*2.603.398,00*	4.727
	0,00	-835
	2.603.398,00	3.892
4. Fertige Erzeugnisse, Grundstücke mit fertig gestellten Bauten	0,00	4
5. Geleistete Anzahlungen	5.557.081,01	658
	46.539.460,86	38.883
III. Forderungen und sonstige Vermögensgegenstände:		
1. Forderungen aus Lieferungen und Leistungen	*180.927.309,03*	179.096
davon mit einer Restlaufzeit von mehr als einem Jahr	*7.440.436,97*	2.329
2. Forderungen gegenüber verbundenen Unternehmen	*453.161.206,92*	441.027
davon mit einer Restlaufzeit von mehr als einem Jahr	*20.729.126,72*	9.116
3. Forderungen gegenüber Unternehmen, mit denen ein Beteiligungsverhältnis besteht	*24.279.493,09*	28.317
davon mit einer Restlaufzeit von mehr als einem Jahr	*11.303.974,81*	12.664
4. Forderungen gegenüber Arbeitsgemeinschaften	*64.272.218,46*	46.357
5. Sonstige Forderungen und Vermögensgegenstände	*39.906.057,46*	48.310
davon mit einer Restlaufzeit von mehr als einem Jahr	*601.066,99*	15.560
	762.548.284,96	743.107
IV. Kassenbestand, Guthaben bei Kreditinstituten	43.144.429,54	70.721
	937.158.297,69	957.876
C. Rechnungsabgrenzungsposten	1.998.765,39	1.970
D. Aktive latente Steuern	1.073.542,75	0
	1.676.895.087,99	1.636.677

Passiva

	31.12.2016 EUR	31.12.2015 TEUR
A. Eigenkapital:		
I. Eingefordertes und einbezahltes Nennkapital (Grundkapital): Gezeichnetes Nennkapital (Grundkapital)	12.000.000,00	12.000
II. Kapitalrücklagen:		
1. Gebundene Kapitalrücklagen	*14.170.597,00*	14.171
2. Nicht gebundene Kapitalrücklagen	*400.140.104,11*	400.140
	414.310.701,11	414.311
III. Gewinnrücklagen: Andere Rücklagen	8.157.330,57	8.157
IV. Bilanzgewinn (davon Gewinnvortrag EUR 221.891.457,70; Vorjahr: TEUR 214.049)	244.058.809,85	221.891
	678.526.841,53	656.359
B. Rückstellungen:		
1. Rückstellungen für Abfertigungen	44.967.869,00	42.590
2. Rückstellungen für Pensionen	6.641.568,00	6.049
3. Steuerrückstellungen	112.338,32	2.603
4. Sonstige Rückstellungen	166.273.722,08	142.465
	217.995.497,40	193.707
C. Verbindlichkeiten:		
1. Verbindlichkeiten gegenüber Kreditinstituten	114.647,96	1
davon mit einer Restlaufzeit bis zu einem Jahr	*114.647,96*	1
2. Erhaltene Anzahlungen auf Bestellungen	142.331.690,06	122.805
davon mit einer Restlaufzeit bis zu einem Jahr	*142.331.690,06*	122.805
3. Verbindlichkeiten aus Lieferungen und Leistungen	181.097.698,09	187.754
davon mit einer Restlaufzeit bis zu einem Jahr	*176.677.717,33*	182.344
davon mit einer Restlaufzeit von mehr als einem Jahr	*4.419.980,76*	5.410
4. Verbindlichkeiten gegenüber verbundenen Unternehmen	320.086.187,21	320.152
davon mit einer Restlaufzeit bis zu einem Jahr	*70.086.187,21*	70.152
davon mit einer Restlaufzeit von mehr als einem Jahr	*250.000.000,00*	250.000
5. Verbindlichkeiten gegenüber Unternehmen, mit denen ein Beteiligungsverhältnis besteht	9.806.259,40	9.235
davon mit einer Restlaufzeit bis zu einem Jahr	*9.806.259,40*	9.235
6. Verbindlichkeiten gegenüber Arbeitsgemeinschaften	41.157.705,33	56.962
davon mit einer Restlaufzeit bis zu einem Jahr	*41.157.705,33*	56.962
7. Sonstige Verbindlichkeiten	84.975.774,01	88.950
davon aus Steuern	*43.760.702,19*	51.003
davon im Rahmen der sozialen Sicherheit	*20.308.591,43*	18.747
davon mit einer Restlaufzeit bis zu einem Jahr	*84.975.774,01*	88.825
davon mit einer Restlaufzeit von mehr als einem Jahr	*0,00*	125
	779.669.965,06	785.859
	526.049.964,30	530.324
	254.619.980,76	255.535
D. Rechnungsabgrenzungsposten	702.984,00	751
	1.676.895.087,99	1.636.677

STRABAG
STRABAG AG

Gewinn- und Verlustrechnung für das Geschäftsjahr 2016

	2016 EUR	2015 TEUR
1. Umsatzerlöse	2.095.546.564,29	2.028.921
2. Veränderung des Bestands an fertigen und unfertigen Erzeugnissen sowie an noch nicht abrechenbaren Leistungen	-278.732.784,89	-68.155
3. Sonstige betriebliche Erträge	17.880.501,94	17.323
4. Aufwendungen für Material und sonstige bezogene Herstellungsleistungen	-1.140.298.105,25	-1.292.023
5. Personalaufwand	-505.061.467,12	-488.164
6. Abschreibungen	-37.087.851,35	-35.788
7. Sonstige betriebliche Aufwendungen	-162.322.263,71	-175.053
8. Zwischensumme aus Z 1 bis Z 7 **(Betriebsergebnis)**	**-10.075.406,09**	-12.939
9. Erträge aus Beteiligungen (davon aus verbundenen Unternehmen EUR 74.539.718,21; Vorjahr: TEUR 168.490)	83.774.524,00	188.266
10. Erträge aus anderen Wertpapieren und Ausleihungen des Finanzanlagevermögens	424.459,03	530
11. Sonstige Zinsen und ähnliche Erträge (davon aus verbundenen Unternehmen EUR 11.404.420,38; Vorjahr: TEUR 15.331)	17.012.214,69	22.401
12. Erträge aus dem Abgang von und der Zuschreibung zu Finanzanlagen und Wertpapieren des Umlaufvermögens	30.805.467,79	18.975
13. Aufwendungen aus Finanzanlagen und aus Wertpapieren des Umlaufvermögens:		
a) Abschreibungen aus verbundenen Unternehmen	*-20.287.109,84*	-74.866
b) Sonstige Abschreibungen	*-435.815,32*	-12.300
c) Sonstige Aufwendungen aus verbundenen Unternehmen	*-64.323.170,49*	-107.125
d) Übrige	*-19.408.586,34*	-109
	-104.454.681,99	-194.400
14. Zinsen und ähnliche Aufwendungen (davon aus verbundenen Unternehmen EUR 8.422.116,11; Vorjahr: TEUR 11.457)	-9.676.412,05	-14.113
15. Zwischensumme aus Z 9 bis Z 14 **(Finanzergebnis)**	**17.885.571,47**	21.658
16. Ergebnis vor Steuern	**7.810.165,38**	8.718
17. Steuern vom Einkommen und vom Ertrag:		
a) Ertragsteuern	-1.615.348,22	-3.190
b) Steuerumlage	12.401.935,11	2.001
c) Latente Steuer	3.570.399,88	0
	14.356.986,77	-1.189
18. Ergebnis nach Steuern = Jahresüberschuss	**22.167.152,15**	7.529
19. Auflösung Gewinnrücklagen	0,00	314
20. Jahresgewinn	**22.167.152,15**	7.843
21. Gewinnvortrag aus dem Vorjahr	221.891.457,70	214.049
22. Bilanzgewinn	**244.058.609,85**	221.891

STRABAG
STRABAG AG

Insgesamt verbesserte sich der Betriebserfolg im Vergleich zum Vorjahr um TEUR 2.865 auf TEUR -10.075 (Vorjahr: TEUR -12.940).

Die rückläufige Entwicklung der Erträge aus Beteiligungen ist durch Einmaleffekte aus Gewinnübernahmen und Ausschüttungen von Tochtergesellschaften im Vorjahr bedingt. Dies führte im Berichtsjahr zu einem Rückgang der Erträge aus Beteiligungen von TEUR 188.266 auf TEUR 83.775. Die Erträge aus Beteiligungen setzten sich im Wesentlichen aus Gewinnübernahmen und Ausschüttungen von Tochtergesellschaften aus dem Inland in Höhe von TEUR 16.848 (Vorjahr: TEUR 78.874) und dem Ausland in Höhe von TEUR 67.351 (Vorjahr: TEUR 109.921) zusammen.

Eine gegenläufige Entwicklung ist bei den Aufwendungen aus Finanzanlagen eingetreten. Die Abnahme der Aufwendungen aus Finanzanlagen von TEUR 194.401 auf TEUR 104.455 resultierte hauptsächlich aus dem Rückgang der Abschreibungen von Anteilen an verbundenen Unternehmen sowie aus sinkenden Aufwendungen aus der Konzernfinanzierung gegenüber Tochtergesellschaften.

Bezüglich des Zinsergebnisses gab es im Berichtsjahr eine leichte Abnahme von TEUR 8.288 auf TEUR 7.336. Diese Entwicklung resultierte überwiegend aus dem Rückgang der Zinserträge von Konzernunternehmen.

In Summe führten die genannten Umstände im Berichtsjahr zu einer Abnahme des Finanzerfolgs von TEUR 21.658 auf TEUR 17.886.

Die Abnahme des Ergebnisses aus Beteiligungen konnte durch die Verbesserung des Betriebserfolgs kompensiert werden, sodass sich das Ergebnis vor Zinsen und Steuern gegenüber dem Vorjahr von TEUR 430 auf TEUR 474 leicht verbesserte.

Das Ergebnis vor Steuern verminderte sich im Vergleich zum Vorjahr um 10,42 % von TEUR 8.718 auf TEUR 7.810.

Insgesamt haben die geringen Abweichungen in den Ergebnissen nur zu einer unwesentlichen Beeinflussung sämtlicher Rentabilitätskennzahlen im Vergleich zu 2015 geführt.

Nach Berücksichtigung der Steuern vom Einkommen und vom Ertrag in Höhe von TEUR 14.357 (Vorjahr: TEUR -1.189) ergab sich ein Ergebnis nach Steuern und ein Jahresüberschuss in Höhe von TEUR 22.167 (Vorjahr: TEUR 7.529).

Nach der Veränderung der Rücklagen sowie der Anrechnung des Gewinnvortrages aus dem Vorjahr resultierte im Berichtsjahr ein Bilanzgewinn von TEUR 244.059 (Vorjahr: TEUR 221.891).

VERMÖGENS- UND FINANZLAGE

	2016	2015
Nettoverschuldung in TEUR (Net Debt)[1]	286.953	105.839
Nettoumlaufvermögen in TEUR (Working Capital)[2]	191.510	50.969
Eigenkapitalquote in % (Equity Ratio)	40,5	40,1
Nettoverschuldungsgrad in % (Gearing)[3]	42,3	16,1

[1] Nettoverschuldung = Verzinsliches Fremdkapital + langfristige Rückstellungen – liquide Mittel
[2] Nettoumlaufvermögen = kurzfristiges Umlaufvermögen – liquide Mittel – kurzfristiges Fremdkapital
[3] Gearing = Nettoverschuldung / Eigenmittel

STRABAG
STRABAG AG

Das Eigenkapital hat sich im Vergleich zum Jahr 2015 von TEUR 656.359 auf TEUR 678.527 erhöht. Daraus resultierte eine leichte Verbesserung der Eigenkapitalquote von 40,1 % im Vorjahr auf 40,5 % im Berichtsjahr.

Der deutliche Anstieg der Nettoverschuldung (Net Debt) von TEUR 105.839 auf TEUR 286.953 ist auf die Abnahme der liquiden Mittel, bedingt durch den Erwerb von Finanzanlagen und den damit verbundenen Anstieg an Konzernfinanzforderungen zurückzuführen. Diese Entwicklung spiegelte sich auch im Nettoverschuldungsgrad wider, der von 16,1 % auf 42,3 % angestiegen ist.

Die Zunahme der Konzernfinanzforderungen bewirkte einen Anstieg des Nettoumlaufvermögens von TEUR 50.969 im Vorjahr auf TEUR 191.510 im Zeitraum des Berichtsjahres.

CASHFLOW

	2016	2015
CF aus der Betriebstätigkeit in TEUR	140.884	112.189
CF aus der Finanzierungstätigkeit in TEUR	6.919	-5.699
CF aus der Investitionstätigkeit in TEUR	-322.171	-111.060

Der Cashflow aus der Betriebstätigkeit betrug im Berichtsjahr TEUR 140.884 und setzte sich aus dem positiven Cashflow aus dem Ergebnis und der Veränderung der Konzernforderungen bzw. Konzernverbindlichkeiten aus Leistungsverrechnungen zusammen.

Der Zufluss von liquiden Mitteln beim Cashflow aus der Finanzierungstätigkeit in Höhe von TEUR 6.919 ergab sich im Wesentlichen aus der Veränderung der Konzernfinanzverbindlichkeiten.

Der Mittelabfluss bezüglich des Cashflows aus der Investitionstätigkeit erhöhte sich im Geschäftsjahr 2016 von TEUR -111.060 auf TEUR -322.171. Flüssige Mittel verbrauchten die Investitionen in das Anlagevermögen in Höhe von TEUR -103.345 und die Erhöhung der Finanzierungsforderungen an Tochtergesellschaften in Höhe von TEUR -239.959. Positiv haben sich die Anlagenabgänge in Höhe von TEUR 21.133 auf den Cashflow aus der Investitionstätigkeit ausgewirkt.

INVESTITIONEN

Im Geschäftsjahr 2016 wurden immaterielle Vermögensgegenstände in Höhe von TEUR 142 (Vorjahr: TEUR 209) und Sachanlagen in Höhe von TEUR 40.326 (Vorjahr TEUR 27.629) angeschafft. Die Zugänge bei den Finanzanlagen betrugen im Berichtsjahr TEUR 62.877 (Vorjahr: TEUR 69.794) und standen im Wesentlichen im Zusammenhang mit Zugängen bei den Anteilen an verbundenen Unternehmen.

BERICHT ÜBER DIE VORAUSSICHTLICHE ENTWICKLUNG UND DIE RISIKEN DES UNTERNEMENS

VORAUSSICHTLICHE ENTWICKLUNG DES UNTERNEHMENS

Anders als die Konjunktur insgesamt konnte die Bauwirtschaft in den 19 Euroconstruct-Ländern 2016 mit +2,0 % einen etwas höheren Zuwachs verbuchen als im Jahr zuvor (+1,8 %), blieb damit jedoch unter den ursprünglichen Prognosen, die ein deutlicheres Signal der Erholung vorhergesagt hatten.

STRABAG
STRABAG AG

KPMG

STRABAG AG,
Spittal an der Drau

Bericht über die Prüfung des Jahresabschlusses zum 31. Dezember 2016

D.O.O. VODOVOD I KANALIZACIJA DANILO
VIK

STRABAG
STRABAG AG

4. Bestätigungsvermerk

Bericht zum Jahresabschluss

Prüfungsurteil

Wir haben den Jahresabschluss der

STRABAG AG,
Spittal an der Drau,

bestehend aus der Bilanz zum 31. Dezember 2016, der Gewinn- und Verlustrechnung für das an diesem Stichtag endende Geschäftsjahr und dem Anhang, geprüft.

Nach unserer Beurteilung entspricht der Jahresabschluss den gesetzlichen Vorschriften und vermittelt ein möglichst getreues Bild der Vermögens- und Finanzlage zum 31. Dezember 2016 sowie der Ertragslage der Gesellschaft für das an diesem Stichtag endende Geschäftsjahr in Übereinstimmung mit den österreichischen unternehmensrechtlichen Vorschriften.

Grundlage für das Prüfungsurteil

Wir haben unsere Abschlussprüfung in Übereinstimmung mit den österreichischen Grundsätzen ordnungsgemäßer Abschlussprüfung durchgeführt. Diese Grundsätze erfordern die Anwendung der International Standards on Auditing (ISA). Unsere Verantwortlichkeiten nach diesen Vorschriften und Standards sind im Abschnitt "Verantwortlichkeiten des Abschlussprüfers für die Prüfung des Jahresabschlusses" unseres Bestätigungsvermerks weitergehend beschrieben. Wir sind von der Gesellschaft unabhängig in Übereinstimmung mit den österreichischen unternehmensrechtlichen und berufsrechtlichen Vorschriften und wir haben unsere sonstigen beruflichen Pflichten in Übereinstimmung mit diesen Anforderungen erfüllt. Wir sind der Auffassung, dass die von uns erlangten Prüfungsnachweise ausreichend und geeignet sind, um als Grundlage für unser Prüfungsurteil zu dienen.

Verantwortlichkeiten der gesetzlichen Vertreter und des Aufsichtsrats für den Jahresabschluss

Die gesetzlichen Vertreter sind verantwortlich für die Aufstellung des Jahresabschlusses und dafür, dass dieser in Übereinstimmung mit den österreichischen unternehmensrechtlichen Vorschriften ein möglichst getreues Bild der Vermögens-, Finanz- und Ertragslage der Gesellschaft vermittelt. Ferner sind die gesetzlichen Vertreter verantwortlich für die internen Kontrollen, die sie als notwendig erachten, um die Aufstellung eines Jahresabschlusses zu ermöglichen, der frei von wesentlichen – beabsichtigten oder unbeabsichtigten – falschen Darstellungen ist.

Bei der Aufstellung des Jahresabschlusses sind die gesetzlichen Vertreter dafür verantwortlich, die Fähigkeit der Gesellschaft zur Fortführung der Unternehmenstätigkeit zu beurteilen, Sachverhalte im Zusammenhang mit der Fortführung der Unternehmenstätigkeit – sofern einschlägig – anzugeben sowie dafür, den Rechnungslegungsgrundsatz der Fortführung der Unternehmenstätigkeit anzuwenden, es sei denn, die gesetzlichen Vertreter beabsichtigen, entweder die Gesellschaft zu liquidieren oder die Unternehmenstätigkeit einzustellen, oder haben keine realistische Alternative dazu.

231

VIK DANILOVGRAD

STRABAG
STRABAG AG

Der Aufsichtsrat ist verantwortlich für die Überwachung des Rechnungslegungsprozesses der Gesellschaft.

Verantwortlichkeiten des Abschlussprüfers für die Prüfung des Jahresabschlusses

Unsere Ziele sind, hinreichende Sicherheit darüber zu erlangen, ob der Jahresabschluss als Ganzes frei von wesentlichen – beabsichtigten oder unbeabsichtigten – falschen Darstellungen ist und einen Bestätigungsvermerk zu erteilen, der unser Prüfungsurteil beinhaltet. Hinreichende Sicherheit ist ein hohes Maß an Sicherheit, aber keine Garantie dafür, dass eine in Übereinstimmung mit den österreichischen Grundsätzen ordnungsgemäßer Abschlussprüfung, die die Anwendung der ISA erfordern, durchgeführte Abschlussprüfung eine wesentliche falsche Darstellung, falls eine solche vorliegt, stets aufdeckt. Falsche Darstellungen können aus dolosen Handlungen oder Irrtümern resultieren und werden als wesentlich angesehen, wenn von ihnen einzeln oder insgesamt vernünftigerweise erwartet werden könnte, dass sie die auf der Grundlage dieses Jahresabschlusses getroffenen wirtschaftlichen Entscheidungen von Nutzern beeinflussen.

Als Teil einer Abschlussprüfung in Übereinstimmung mit den österreichischen Grundsätzen ordnungsgemäßer Abschlussprüfung, die die Anwendung der ISA erfordern, üben wir während der gesamten Abschlussprüfung pflichtgemäßes Ermessen aus und bewahren eine kritische Grundhaltung.

Darüber hinaus gilt:

- Wir identifizieren und beurteilen die Risiken wesentlicher – beabsichtigter oder unbeabsichtigter – falscher Darstellungen im Abschluss, planen Prüfungshandlungen als Reaktion auf diese Risiken, führen sie durch und erlangen Prüfungsnachweise, die ausreichend und geeignet sind, um als Grundlage für unser Prüfungsurteil zu dienen. Das Risiko, dass aus dolosen Handlungen resultierende wesentliche falsche Darstellungen nicht aufgedeckt werden, ist höher als ein aus Irrtümern resultierendes, da dolose Handlungen betrügerisches Zusammenwirken, Fälschungen, beabsichtigte Unvollständigkeiten, irreführende Darstellungen oder das Außerkraftsetzen interner Kontrollen beinhalten können.
- Wir gewinnen ein Verständnis von dem für die Abschlussprüfung relevanten internen Kontrollsystem, um Prüfungshandlungen zu planen, die unter den gegebenen Umständen angemessen sind, jedoch nicht mit dem Ziel, ein Prüfungsurteil zur Wirksamkeit des internen Kontrollsystems der Gesellschaft abzugeben.
- Wir beurteilen die Angemessenheit der von den gesetzlichen Vertretern angewandten Rechnungslegungsmethoden sowie die Vertretbarkeit der von den gesetzlichen Vertretern dargestellten geschätzten Werte in der Rechnungslegung und damit zusammenhängende Angaben.

232

STRABAG
STRABAG AG

— Wir ziehen Schlussfolgerungen über die Angemessenheit der Anwendung des Rechnungslegungsgrundsatzes der Fortführung der Unternehmenstätigkeit durch die gesetzlichen Vertreter sowie, auf der Grundlage der erlangten Prüfungsnachweise, ob eine wesentliche Unsicherheit im Zusammenhang mit Ereignissen oder Gegebenheiten besteht, die bedeutsame Zweifel an der Fähigkeit der Gesellschaft zur Fortführung der Unternehmenstätigkeit aufwerfen kann. Falls wir die Schlussfolgerung ziehen, dass eine wesentliche Unsicherheit besteht, sind wir verpflichtet, in unserem Bestätigungsvermerk auf die dazugehörigen Angaben im Jahresabschluss aufmerksam zu machen oder, falls diese Angaben unangemessen sind, unser Prüfungsurteil zu modifizieren. Wir ziehen unsere Schlussfolgerungen auf der Grundlage der bis zum Datum unseres Bestätigungsvermerks erlangten Prüfungsnachweise. Zukünftige Ereignisse oder Gegebenheiten können jedoch die Abkehr der Gesellschaft von der Fortführung der Unternehmenstätigkeit zur Folge haben.

— Wir beurteilen die Gesamtdarstellung, den Aufbau und den Inhalt des Jahresabschlusses einschließlich der Angaben sowie ob der Jahresabschluss die zugrunde liegenden Geschäftsvorfälle und Ereignisse in einer Weise wiedergibt, dass ein möglichst getreues Bild erreicht wird.

— Wir tauschen uns mit dem Aufsichtsrat unter anderem über den geplanten Umfang und die geplante zeitliche Einteilung der Abschlussprüfung sowie über bedeutsame Prüfungsfeststellungen, einschließlich etwaiger bedeutsamer Mängel im internen Kontrollsystem, die wir während unserer Abschlussprüfung erkennen, aus.

Bericht zum Lagebericht

Der Lagebericht ist auf Grund der österreichischen unternehmensrechtlichen Vorschriften darauf zu prüfen, ob er mit dem Jahresabschluss in Einklang steht und ob er nach den geltenden rechtlichen Anforderungen aufgestellt wurde.

Die gesetzlichen Vertreter sind verantwortlich für die Aufstellung des Lageberichtes in Übereinstimmung mit den österreichischen unternehmensrechtlichen Vorschriften.

Wir haben unsere Prüfung in Übereinstimmung mit den Berufsgrundsätzen zur Prüfung des Lageberichtes durchgeführt.

Urteil

Nach unserer Beurteilung ist der Lagebericht nach den geltenden rechtlichen Anforderungen aufgestellt worden und steht in Einklang mit dem Jahresabschluss.

VODOVOD I KANALIZACIJA VIK DANILOVGRAD

233

STRABAG
STRABAG AG

Erklärung

Angesichts der bei der Prüfung des Jahresabschlusses gewonnenen Erkenntnisse und des gewonnenen Verständnisses über die Gesellschaft und ihr Umfeld wurden wesentliche fehlerhafte Angaben im Lagebericht nicht festgestellt.

Linz, am 4. April 2017

KPMG Austria GmbH
Wirtschaftsprüfungs- und Steuerberatungsgesellschaft

Mag. Ernst Pichler
Wirtschaftsprüfer

Die Veröffentlichung oder Weitergabe des Jahresabschlusses mit unserem Bestätigungsvermerk darf nur in der von uns bestätigten Fassung erfolgen. Dieser Bestätigungsvermerk bezieht sich ausschließlich auf den deutschsprachigen und vollständigen Jahresabschluss samt Lagebericht. Für abweichende Fassungen sind die Vorschriften des § 281 Abs 2 UGB zu beachten.

STRABAG
STRABAG AG

STRABAG AG,
Spittal an der Drau

Bilanz zum 31. Dezember 2016

Aktiva

	31.12.2016 EUR	31.12.2015 TEUR
A. Anlagevermögen:		
I. Immaterielle Vermögensgegenstände:		
1. Konzessionen, gewerbliche Schutzrechte und ähnliche Rechte und Vorteile sowie daraus abgeleitete Lizenzen	15.269,79	15
2. Firmenwert	92.602,32	107
3. Geleistete Anzahlungen	332.124,00	200
	439.996,11	322
II. Sachanlagen:		
1. Grundstücke, grundstücksgleiche Rechte und Bauten, einschließlich der Bauten auf fremdem Grund	37.086.354,82	34.158
2. Technische Anlagen und Maschinen	37.587.510,50	40.607
3. Andere Anlagen, Betriebs- und Geschäftsausstattung	35.293.505,96	34.076
4. Geleistete Anzahlungen und Anlagen in Bau	2.526.340,00	1.532
	112.493.711,28	110.373
III. Finanzanlagen:		
1. Anteile an verbundenen Unternehmen	564.016.279,48	490.492
2. Ausleihungen an verbundene Unternehmen	0,07	0
3. Beteiligungen	31.404.076,22	47.338
4. Ausleihungen an Unternehmen, mit denen ein Beteiligungsverhältnis besteht	5.288.568,00	5.289
5. Wertpapiere (Wertrechte) des Anlagevermögens	22.951.875,48	22.952
6. Sonstige Ausleihungen	64.975,52	65
	623.725.774,77	566.136
	736.659.482,16	676.831
B. Umlaufvermögen:		
I. Nicht fertig gestellte Bauarbeiten	1.105.224.289,67	1.386.425
abzüglich erhaltene Anzahlungen	-1.020.298.167,34	-1.281.260
	84.926.122,33	105.165
II. Vorräte:		
1. Roh-, Hilfs- und Betriebsstoffe	23.394.619,33	22.809
2. Noch nicht abgerechnete Leistungen	14.984.362,52	11.521
3. Grundstücke mit nicht fertig gestellten Bauten	2.603.398,00	4.727
abzüglich erhaltene Anzahlungen	0,00	-835
	2.603.398,00	3.892
4. Fertige Erzeugnisse, Grundstücke mit fertig gestellten Bauten	0,00	4
5. Geleistete Anzahlungen	5.557.081,01	658
	46.539.460,86	38.883
III. Forderungen und sonstige Vermögensgegenstände:		
1. Forderungen aus Lieferungen und Leistungen	180.927.309,03	179.096
davon mit einer Restlaufzeit von mehr als einem Jahr	*7.440.436,97*	*2.323*
2. Forderungen gegenüber verbundenen Unternehmen	453.161.206,92	441.027
davon mit einer Restlaufzeit von mehr als einem Jahr	*20.729.126,72*	*9.116*
3. Forderungen gegenüber Unternehmen, mit denen ein Beteiligungsverhältnis besteht	24.279.493,09	28.317
davon mit einer Restlaufzeit von mehr als einem Jahr	*11.303.974,81*	*12.664*
4. Forderungen gegenüber Arbeitsgemeinschaften	64.272.218,46	48.357
5. Sonstige Forderungen und Vermögensgegenstände	39.908.057,46	48.310
davon mit einer Restlaufzeit von mehr als einem Jahr	*801.086,09*	*18.580*
	762.548.284,96	743.107
IV. Kassenbestand, Guthaben bei Kreditinstituten	43.144.429,54	70.721
	937.158.297,69	957.876
C. Rechnungsabgrenzungsposten	1.998.765,39	1.970
D. Aktive latente Steuern	1.078.642,75	0
	1.676.895.087,99	**1.836.677**

Passiva

	31.12.2016 EUR	31.12.2015 TEUR
A. Eigenkapital:		
I. Eingefordertes und einbezahltes Nennkapital (Grundkapital): Gezeichnetes Nennkapital (Grundkapital)	12.000.000,00	12.000
II. Kapitalrücklagen:		
1. Gebundene Kapitalrücklagen	14.170.597,00	14.171
2. Nicht gebundene Kapitalrücklagen	400.140.104,11	400.140
	414.310.701,11	414.311
III. Gewinnrücklagen: Andere Rücklagen	8.157.330,57	8.157
IV. Bilanzgewinn (davon Gewinnvortrag EUR 221.891.457,70; Vorjahr: TEUR 214.049)	244.058.609,85	221.891
	678.526.641,53	656.359
B. Rückstellungen:		
1. Rückstellungen für Abfertigungen	44.967.869,00	42.590
2. Rückstellungen für Pensionen	6.641.568,00	6.049
3. Steuerrückstellungen	112.338,32	2.603
4. Sonstige Rückstellungen	166.273.722,08	142.465
	217.995.497,40	193.707
C. Verbindlichkeiten:		
1. Verbindlichkeiten gegenüber Kreditinstituten	114.647,96	1
davon mit einer Restlaufzeit bis zu einem Jahr	*114.647,96*	*1*
2. Erhaltene Anzahlungen auf Bestellungen	142.331.690,06	122.805
davon mit einer Restlaufzeit bis zu einem Jahr	*142.331.690,06*	*122.805*
3. Verbindlichkeiten aus Lieferungen und Leistungen	181.097.698,09	187.754
davon mit einer Restlaufzeit bis zu einem Jahr	*176.477.717,33*	*182.344*
davon mit einer Restlaufzeit von mehr als einem Jahr	*4.619.980,76*	*5.410*
4. Verbindlichkeiten gegenüber verbundenen Unternehmen	320.086.187,21	320.152
davon mit einer Restlaufzeit bis zu einem Jahr	*70.086.187,21*	*70.152*
davon mit einer Restlaufzeit von mehr als einem Jahr	*250.000.000,00*	*250.000*
5. Verbindlichkeiten gegenüber Unternehmen, mit denen ein Beteiligungsverhältnis besteht	9.906.259,40	9.235
davon mit einer Restlaufzeit bis zu einem Jahr	*9.906.259,40*	*9.235*
6. Verbindlichkeiten gegenüber Arbeitsgemeinschaften	41.157.708,33	56.962
davon mit einer Restlaufzeit bis zu einem Jahr	*41.157.708,33*	*56.962*
7. Sonstige Verbindlichkeiten	84.975.774,01	88.950
davon aus Steuern	*43.760.702,19*	*51.063*
davon im Rahmen der sozialen Sicherheit	*20.308.691,43*	*16.747*
davon mit einer Restlaufzeit bis zu einem Jahr	*84.975.774,01*	*88.825*
davon mit einer Restlaufzeit von mehr als einem Jahr	*0,00*	*125*
	779.669.965,06	785.859
davon mit einer Restlaufzeit bis zu einem Jahr	*525.049.984,30*	*530.324*
davon mit einer Restlaufzeit von mehr als einem Jahr	*254.619.980,76*	*255.535*
D. Rechnungsabgrenzungsposten	702.984,00	751
	1.676.895.087,99	**1.836.677**

STRABAG
STRABAG AG

Gewinn- und Verlustrechnung für das Geschäftsjahr 2016

	2016 EUR	2015 TEUR
1. Umsatzerlöse	2.095.546.564,29	2.028.921
2. Veränderung des Bestands an fertigen und unfertigen Erzeugnissen sowie an noch nicht abrechenbaren Leistungen	-278.732.784,89	-68.155
3. Sonstige betriebliche Erträge	17.880.501,94	17.323
4. Aufwendungen für Material und sonstige bezogene Herstellungsleistungen	-1.140.298.105,25	-1.292.023
5. Personalaufwand	-505.061.467,12	-488.164
6. Abschreibungen	-37.087.851,35	-35.788
7. Sonstige betriebliche Aufwendungen	-162.322.263,71	-175.053
8. Zwischensumme aus Z 1 bis Z 7 **(Betriebsergebnis)**	**-10.075.406,09**	-12.939
9. Erträge aus Beteiligungen (davon aus verbundenen Unternehmen EUR 74.539.718,21; Vorjahr: TEUR 168.490)	83.774.524,00	188.266
10. Erträge aus anderen Wertpapieren und Ausleihungen des Finanzanlagevermögens	424.459,03	530
11. Sonstige Zinsen und ähnliche Erträge (davon aus verbundenen Unternehmen EUR 11.404.420,38; Vorjahr: TEUR 15.331)	17.012.214,69	22.401
12. Erträge aus dem Abgang von und der Zuschreibung zu Finanzanlagen und Wertpapieren des Umlaufvermögens	30.805.467,79	18.975
13. Aufwendungen aus Finanzanlagen und aus Wertpapieren des Umlaufvermögens:		
a) Abschreibungen aus verbundenen Unternehmen	*-20.287.109,84*	-74.866
b) Sonstige Abschreibungen	*-435.815,32*	-12.300
c) Sonstige Aufwendungen aus verbundenen Unternehmen	*-64.323.170,49*	-107.125
d) Übrige	*-19.408.586,34*	-109
	-104.454.681,99	-194.400
14. Zinsen und ähnliche Aufwendungen (davon aus verbundenen Unternehmen EUR 8.422.116,11; Vorjahr: TEUR 11.457)	-9.676.412,05	-14.113
15. Zwischensumme aus Z 9 bis Z 14 **(Finanzergebnis)**	**17.885.571,47**	21.658
16. Ergebnis vor Steuern	**7.810.165,38**	8.718
17. Steuern vom Einkommen und vom Ertrag:		
a) Ertragsteuern	-1.615.348,22	-3.190
b) Steuerumlage	12.401.935,11	2.001
c) Latente Steuer	3.570.399,88	0
	14.356.986,77	-1.189
18. Ergebnis nach Steuern = Jahresüberschuss	**22.167.152,15**	7.529
19. Auflösung Gewinnrücklagen	0,00	314
20. Jahresgewinn	**22.167.152,15**	7.843
21. Gewinnvortrag aus dem Vorjahr	221.891.457,70	214.049
22. Bilanzgewinn	**244.058.609,85**	221.891

STRABAG
STRABAG AG

Auditor's report

Report on the Financial Statements

Audit Opinion

We have audited the financial statements of

STRABAG AG,
Spittal an der Drau, Austria,

that comprise the statement of financial position as of 31 December 2016, the income statement for the year then ended, and the notes.

In our opinion, the financial statements present fairly, in all material respects, the financial position of the Company as of 31 December 2016, and its financial performance for the year then ended in accordance with Austrian Generally Accepted Accounting Principles.

Basis for our Opinion

We conducted our audit in accordance with the Austrian Standards on Auditing. These standards require the audit to be conducted in accordance with International Standards on Auditing (ISA). Our responsibilities pursuant to these rules and standards are described in the "Auditors' Responsibility" section of our report. We are independent of the Company within the meaning of Austrian commercial law and professional regulations, and have fulfilled our other responsibilities under those relevant ethical requirements. We believe that the audit evidence we have obtained is sufficient and appropriate to provide a basis for our audit opinion.

Management's Responsibility and Responsibility of the Supervisory Board for the Financial Statements

The Company's management is responsible for the preparation and fair presentation of these financial statements in accordance with Austrian Generally Accepted Accounting Principles and for such internal control as management determines is necessary to enable the preparation of financial statements that are free from material misstatement, whether due to fraud or error.

Management is also responsible for assessing the Company's ability to continue as a going concern, and, where appropriate, to disclose matters that are relevant to the Company's ability to continue as a going concern and to apply the going concern assumption in its financial reporting, except in circumstances in which liquidation of the Company or closure of operations is planned or cases in which such measures appear unavoidable.

The supervisory board is responsible for the oversight of the financial reporting process of the Company

237

STRABAG
STRABAG AG

Auditors' Responsibility

Our aim is to obtain reasonable assurance about whether the financial statements taken as a whole, are free of material – intentional or unintentional – misstatements and to issue an audit report containing our audit opinion. Reasonable assurance represents a high degree of assurance, but provides no guarantee that an audit conducted in accordance Austrian Standards on Auditing, which require the audit to be performed in accordance with ISA, will detect a material misstatement, if any. Misstatements may result from fraud or error and are considered material if they could, individually or as a whole, be expected to influence the economic decisions of users based on the financial statements.

As part of an audit in accordance with Austrian Standards on Auditing, which require the audit to be performed in accordance with ISA, we exercise professional judgment and retain professional scepticism throughout the audit.

Moreover:

— We identify and assess the risks of material misstatements – intentional or unintentional – in the financial statements, we plan and perform procedures to address such risks and obtain sufficient and appropriate audit evidence to serve as a basis for our audit opinion. The risk that material misstatements due to fraud remain undetected is higher than that of material misstatements due to error, since fraud may include collusion, forgery, intentional omissions, misleading representation or override of internal control.

— We consider internal control relevant to the audit in order to design audit procedures that are appropriate in the circumstances, but not for the purpose of expressing an opinion on the effectiveness of the entity's internal control.

— We evaluate the appropriateness of accounting policies used and the reasonableness of accounting estimates as well as related disclosures made by management.

— We conclude on the appropriateness of management's use of the going concern assumption and, based on the audit evidence obtained, whether a material uncertainty exists related to events or conditions that may cast significant doubt on the entity's ability to continue as a going concern. In case we conclude that there is a material uncertainty about the entity's ability to continue as a going concern, we are required to draw attention to the respective note in the financial statements in our audit report or, in case such disclosures are not appropriate, to modify our audit opinion. We conclude based on the audit evidence obtained until the date of our audit report. Future events or conditions however may result in the Company departing from the going concern assumption.

— We assess the overall presentation, structure and content of the financial statements including the notes as well as whether the financial statements give a true and fair view of the underlying business transactions and events.

— We communicate to the supervisory board/audit committee the scope and timing of our audit as well as significant findings including significant deficiencies in internal control that we identify in the course of our audit.

STRABAG
STRABAG AG

Report on Management Report

In accordance with the Austrian Commercial Code the management report is to be audited as to whether it is consistent with the financial statements and as to whether it has been prepared in accordance with legal requirements.

The legal representatives of the Company are responsible for the preparation of the management report in accordance with the Austrian Commercial Code and other legal or regulatory requirements.

We have conducted our audit in accordance with generally accepted standards on the audit of management reports as applied in Austria.

Opinion

In our opinion, the management report has been prepared in accordance with legal requirements and is consistent with the financial statements.

Statement

Based on our knowledge gained in the course of the audit of the financial statements and the understanding of the Company and its environment, we did not note any material misstatements in the management report.

Linz, 4 April 2017

KPMG Austria GmbH
Wirtschaftsprüfungs- und Steuerberatungsgesellschaft

Mag. Ernst Pichler
Wirtschaftsprüfer
(Austrian Chartered Accountant)

This report is a translation of the original report in German, which is solely valid.
The financial statements together with our auditor's opinion may only be published if the financial statements and the management report are identical with the audited version attached to this report. Section 281 Paragraph 2 UGB (Austrian Commercial Code) applies.

STRABAG AG

STRABAG AG,
Spittal an der Drau, Austria

240

Balance sheet as of 31 December 2016

Assets

	31.12.2016 EUR	31.12.2015 TEUR
A. Non-current assets:		
I. Intangible assets:		
1. Concessions, industrial property rights and similar rights as well as licences derived thereof	15,269.79	15
2. Goodwill	92,602.32	107
3. Advances paid	332,124.00	200
	439,996.11	322
II. Tangible assets:		
1. Properties, land rights equivalent real property, buildings including building on third part property	*37,086,354.82*	34,158
2. Technical equipment and machinery	*37,587,510.50*	40,807
3. Other facilities, furniture and fixtures and office equipment	*35,293,505.96*	34,076
4. Advances paid and facilities under construction	*2,526,340.00*	1,532
	112,493,711.28	110,373
III. Financial assets:		
1. Investments in subsidiaries	*564,016,279.48*	490,492
2. Loans to subsidiaries	*0.07*	0
3. Investments in participation companies	*31,404,076.22*	47,338
4. Loans to participation companies	*5,288,568.00*	5,289
5. Securities	*22,951,875.48*	22,952
6. Other loans	*64,975.52*	65
	623,725,774.77	566,136
	736,659,482.16	676,831
B. Current assets:		
I. Construction work in progress	1,105,224,289.67	1,386,425
less advance payments received	-1,020,298,167.34	-1,281,260
	84,926,122.33	105,165
II. Inventories:		
1. Raw materials and supplies	23,394,619.33	22,809
2. Services rendered, not yet chargeable	14,984,362.52	11,521
3. Land with unfinished construction	*2,603,398.00*	4,727
less advance payments received	*0.00*	-835
	2,603,398.00	3,892
4. Finished goods, land with finished construction	0.00	4
5. Prepayments	5,557,081.01	658
	46,539,460.86	38,883
III. Accounts receivable and other assets:		
1. Trade receivables	*180,927,309.03*	179,096
thereof remaining term of more than one year	*7,440,436.97*	*2,323*
2. Receivables from subsidiaries	*453,161,206.92*	441,027
thereof remaining term of more than one year	*20,729,126.72*	*9,116*
3. Receivables from participation companies	*24,279,493.09*	28,317
thereof remaining term of more than one year	*11,303,974.81*	*12,864*
4. Receivables from joint ventures	*64,272,218.46*	46,357
5. Other receivables and assets	*39,908,057.46*	48,310
thereof remaining term of more than one year	*801,086.99*	*15,580*
	762,548,284.96	743,107
IV. Cash assets, including bank accounts	43,144,429.54	70,721
	937,158,297.69	957,876
C. Accruals and deferrals	1,998,765.39	1,970
D. Deferred tax assets	1,078,542.75	0
	1,676,895,087.99	1,636,677

Equity and Liabilities

	31.12.2016 EUR	31.12.2015 TEUR
A. Equity:		
I. Subscribed and paid in nominal capital (share capital):		
Subscribed nominal capital (share capital)	12,000,000.00	12,000
II. Capital reserves:		
1. Committed	*14,170,597.00*	14,171
2. Uncommitted	*400,140,104.11*	400,140
	414,310,701.11	414,311
III. Retained earnings:		
Other reserves	8,157,330.57	8,157
IV. Unappropriated net profit (thereof profit brought forward EUR 221,891,457.70; previous year: TEUR 214,049)	244,058,609.85	221,891
	678,526,641.53	656,359
B. Provisions:		
1. Provisions for severance payments	44,967,869.00	42,590
2. Provisions for pensions	8,641,568.00	6,049
3. Provisions for taxes	112,338.32	2,603
4. Other provisions	166,273,722.08	142,465
	217,995,497.40	193,707
C. Accounts payable:		
1. Bank borrowings	114,647.96	1
thereof remaining term up to one year	*114,647.96*	*1*
2. Prepayments received	142,331,690.06	122,805
thereof remaining term up to one year	*142,331,690.06*	*122,805*
3. Trade payables	181,097,698.09	187,754
thereof remaining term up to one year	*176,477,717.33*	*182,344*
thereof remaining term of more than one year	*4,619,980.76*	*5,410*
4. Payables to subsidiaries	320,086,187.21	320,152
thereof remaining term up to one year	*70,086,187.21*	*70,152*
thereof remaining term of more than one year	*250,000,000.00*	*250,000*
5. Payables to participation companies	9,906,259.40	9,235
thereof remaining term up to one year	*9,906,259.40*	*9,235*
6. Payables to joint ventures	41,157,708.33	56,962
thereof remaining term up to one year	*41,157,708.33*	*56,962*
7. Other payables	84,975,774.01	88,950
thereof taxes	*43,750,702.19*	*51,003*
thereof social security liabilities	*20,308,591.43*	*18,747*
thereof remaining term up to one year	*84,975,774.01*	*88,825*
thereof remaining term of more than one year	*0.00*	*125*
	779,669,985.06	785,859
thereof remaining term up to one year	*525,049,984.30*	*530,324*
thereof remaining term of more than one year	*254,619,980.76*	*255,535*
D. Deferred income	702,984.00	751
	1,676,895,087.99	1,636,677

STRABAG
STRABAG AG

Income Statement for the Financial Year 2016

	2016 EUR	2015 TEUR
1. Revenue (Sales)	2,095,546,564.29	2,028,921
2. Change in finished goods, work in progress and services not yet chargeable	-278,732,784.89	-68,155
3. Other operating income	17,880,501.94	17,323
4. Cost of materials and other purchased production services	-1,140,298,105.25	-1,292,023
5. Employee benefits expense	-505,061,467.12	-488,164
6. Depreciation	-37,087,851.35	-35,788
7. Other operating expenses	-162,322,263.71	-175,053
8. Subtotal of items 1 through 7 **(operating result)**	**-10,075,406.09**	-12,939
9. Income from investments (thereof from subsidiaries EUR 74,539,718.21; previous year: TEUR 168,490)	83,774,524.00	188,266
10. Income from other long-term securities and loans	424,459.03	530
11. Other interest and similar income (thereof from subsidiaries EUR 11,404,420.38; previous year: TEUR 15,331)	17,012,214.69	22,401
12. Income from disposal and write-up of financial assets and marketable securities	30,805,467.79	18,975
13. Expenses for financial assets and marketable securities:		
a) Depreciation for subsidiaries	*-20,287,109.84*	-74,866
b) Other depreciation	*-435,815.32*	-12,300
c) Other expenses for subsidiaries	*-64,323,170.49*	-107,125
d) Miscellaneous	*-19,408,586.34*	-109
	-104,454,681.99	-194,400
14. Interest and similar expenses (thereof from subsidiaries EUR 8,422,116.11; previous year: TEUR 11,457)	-9,676,412.05	-14,113
15. Subtotal of items 9 through 14 **(financial result)**	**17,885,571.47**	21,658
16. Result before taxes	**7,810,165.38**	8,718
17. Taxes on income and gains:		
a) Income tax	-1,615,348.22	-3,190
b) Tax allocation	12,401,935.11	2,001
c) Deferred tax income	3,570,399.88	0
	14,356,986.77	-1,189
18. Income after taxes = net income for the year	**22,167,152.15**	7,529
19. Reversal of retained earnings	0.00	314
20. Profit for the period	**22,167,152.15**	7,843
21. Profit brought forward	221,891,457.70	214,049
22. Unappropriated net profit	**244,058,609.85**	221,891

STRABAG
STRABAG AG

The operating earnings improved by TEUR 2,865 versus the previous year from TEUR -12,940 to TEUR -10,075.

The lower net income from investments can be explained by non-recurring items related to profit transfers and dividends from subsidiaries in the previous year. This led to a reduction in the net income from investments in the reporting year from TEUR 188,266 to TEUR 83,775. The income from investments was largely comprised of profit transfers and dividends from domestic subsidiaries in the amount of TEUR 16,848 (previous year: TEUR 78,874) and foreign subsidiaries in the amount of TEUR 67,351 (previous year: TEUR 109,921).

The opposite development was registered among the expenses from financial assets. The decrease in expenses from financial assets from TEUR 194,401 to TEUR 104,455 resulted mainly from lower impairments on investments in affiliated companies as well as lower expenses from group financing of subsidiaries.

The interest income fell slightly from TEUR 8,288 to TEUR 7,336 in the year under report. This development resulted mainly from the decline of the interest income from group companies.

Overall, the aforementioned conditions led to a decrease of the financial earnings in the reporting year from TEUR 21,658 to TEUR 17,886.

It was possible to compensate the lower net income from investments with an improvement of the operating result, leading to a slight increase of the earnings before interest and taxes from TEUR 430 in the previous year to TEUR 474.

The earnings before taxes fell in a year-on-year comparison by 10.42 % from TEUR 8,718 to TEUR 7,810.

Overall, the minor deviations in the earnings made only an unsubstantial impact on all profitability figures in comparison to 2015.

Upon consideration of income taxes in the amount of TEUR 14,357 (previous year: TEUR -1,189), this results in earnings after taxes and a net profit of TEUR 22,167 (previous year: TEUR 7,529).

After calculating the changes from reserves, and counting the retained profit brought forward from the previous year, this resulted in a balance sheet profit of TEUR 244,059 (previous year: TEUR 221,891).

FINANCIAL POSITION

	2016	2015
Net debt in TEUR[1]	286,953	105,839
Working capital in TEUR[2]	191,510	50,969
Equity ratio in %	40.5	40.1
Gearing ratio in %[3]	42.3	16.1

[1] Net debt = interest-bearing liabilities + non-current provisions – cash and cash equivalents
[2] Working capital = current assets – cash and cash equivalents – current liabilities
[3] Gearing ratio = net debt / equity

The equity grew year-on-year from TEUR 656,359 in 2015 to TEUR 678,527. This resulted in a slight improvement of the equity ratio from 40.1 % in the previous year to 40.5 % in the year under report.

The considerable increase of the net debt from TEUR 105,839 to TEUR 286,953 can be traced to the reduced cash and cash equivalents as a result of the acquisition of financial assets and the related increase of financial receivables from subsidiaries. This development is also reflected in the net gearing ratio, which grew from 16.1 % to 42.3 %.

The higher financial receivables from subsidiaries led to an increase of the working capital from TEUR 50,969 in the previous year to TEUR 191,510 in the year under report.

CASH FLOWS

	2016	2015
Cash flow from operating activities in TEUR	140,884	112,189
Cash flow from financing activities in TEUR	6,919	-5,699
Cash flow from investing activities in TEUR	-322,171	-111,060

The cash flow from operating activities of TEUR 140,884 in the reporting year was comprised of a positive cash flow from earnings as well as changes in receivables from and payables to subsidiaries on service accounting.

The inflow of cash and cash equivalents in the cash flow from financing activities in the amount of TEUR 6,919 resulted mainly from the changes in financial payables to subsidiaries.

The outflow of cash and cash equivalents in the cash flow from investing activities increased in the 2016 financial year from TEUR -111,060 to TEUR -322,171. Cash was used up by investments in non-current assets in the amount of TEUR -103,345 and through the increase of financing receivables from subsidiaries in the amount of TEUR -239,959. A positive impact on the cash flow from investing activities came from asset disposals in the amount of TEUR 21,133.

CAPTIAL EXPENDITURES

Intangible assets in the amount of TEUR 142 (previous year: TEUR 209) and property, plant and equipment in the amount of TEUR 40,326 (previous year: TEUR 27,629) were purchased in the 2016 financial year. The additions to financial assets amounted to TEUR 62,877 in the reporting year (previous year: TEUR 69,794) and mostly involved additions to the investments in affiliated companies.

COMPANY'S OUTLOOK AND RISK REPORT

OUTLOOK

In contrast to the economy as a whole, the construction sector in the 19 Euroconstruct countries registered slightly higher growth (+2.0 %) in 2016 than the year before (+1.8 %). The plus fell short of the original forecasts, however, which had predicted a clearer sign of recovery. The expectations for the coming years were also scaled back slightly. Nevertheless, thanks to the low interest environment and the subsequent appetite for real estate investments, the construction dynamism should still continue to outperform the general economy. The most recent Euroconstruct forecasts for the period 2017–2019 predict growth between +2.1 % and +2.2 %.

On a country-by-country basis, the development was again quite varied. The strongest growth was registered in Ireland, the Netherlands and Sweden.

BEGLAUBIGTE FOTOKOPIE

KPMG

Auditor's report

Report on the Financial Statements

Audit Opinion

We have audited the financial statements of

STRABAG AG,
Spittal an der Drau, Austria,

that comprise the statement of financial position as of 31 December 2016, the income statement for the year then ended, and the notes.

In our opinion, the financial statements present fairly, in all material respects, the financial position of the Company as of 31 December 2016, and its financial performance for the year then ended in accordance with Austrian Generally Accepted Accounting Principles.

Basis for our Opinion

We conducted our audit in accordance with the Austrian Standards on Auditing. These standards require the audit to be conducted in accordance with International Standards on Auditing (ISA). Our responsibilities pursuant to these rules and standards are described in the "Auditors' Responsibility" section of our report. We are independent of the Company within the meaning of Austrian commercial law and professional regulations, and have fulfilled our other responsibilities under those relevant ethical requirements. We believe that the audit evidence we have obtained is sufficient and appropriate to provide a basis for our audit opinion.

Management's Responsibility and Responsibility of the Supervisory Board for the Financial Statements

The Company's management is responsible for the preparation and fair presentation of these financial statements in accordance with Austrian Generally Accepted Accounting Principles and for such internal control as management determines is necessary to enable the preparation of financial statements that are free from material misstatement, whether due to fraud or error.

Management is also responsible for assessing the Company's ability to continue as a going concern, and, where appropriate, to disclose matters that are relevant to the Company's ability to continue as a going concern and to apply the going concern assumption in its financial reporting, except in circumstances in which liquidation of the Company or closure of operations is planned or cases in which such measures appear unavoidable.

The supervisory board is responsible for the oversight of the financial reporting process of the Company

D.O.O. "VODOVOD I KANALIZACIJA" DANILOVGRAD

244

STRABAG
STRABAG AG

Auditors' Responsibility

Our aim is to obtain reasonable assurance about whether the financial statements taken as a whole, are free of material – intentional or unintentional – misstatements and to issue an audit report containing our audit opinion. Reasonable assurance represents a high degree of assurance, but provides no guarantee that an audit conducted in accordance Austrian Standards on Auditing, which require the audit to be performed in accordance with ISA, will detect a material misstatement, if any. Misstatements may result from fraud or error and are considered material if they could, individually or as a whole, be expected to influence the economic decisions of users based on the financial statements.

As part of an audit in accordance with Austrian Standards on Auditing, which require the audit to be performed in accordance with ISA, we exercise professional judgment and retain professional scepticism throughout the audit.

Moreover:

- We identify and assess the risks of material misstatements – intentional or unintentional – in the financial statements, we plan and perform procedures to address such risks and obtain sufficient and appropriate audit evidence to serve as a basis for our audit opinion. The risk that material misstatements due to fraud remain undetected is higher than that of material misstatements due to error, since fraud may include collusion, forgery, intentional omissions, misleading representation or override of internal control.
- We consider internal control relevant to the audit in order to design audit procedures that are appropriate in the circumstances, but not for the purpose of expressing an opinion on the effectiveness of the entity's internal control.
- We evaluate the appropriateness of accounting policies used and the reasonableness of accounting estimates as well as related disclosures made by management.
- We conclude on the appropriateness of management's use of the going concern assumption and, based on the audit evidence obtained, whether a material uncertainty exists related to events or conditions that may cast significant doubt on the entity's ability to continue as a going concern. In case we conclude that there is a material uncertainty about the entity's ability to continue as a going concern, we are required to draw attention to the respective note in the financial statements in our audit report or, in case such disclosures are not appropriate, to modify our audit opinion. We conclude based on the audit evidence obtained until the date of our audit report. Future events or conditions however may result in the Company departing from the going concern assumption.
- We assess the overall presentation, structure and content of the financial statements including the notes as well as whether the financial statements give a true and fair view of the underlying business transactions and events.
- We communicate to the supervisory board/audit committee the scope and timing of our audit as well as significant findings including significant deficiencies in internal control that we identify in the course of our audit.

Report on Management Report

In accordance with the Austrian Commercial Code the management report is to be audited as to whether it is consistent with the financial statements and as to whether it has been prepared in accordance with legal requirements.

The legal representatives of the Company are responsible for the preparation of the management report in accordance with the Austrian Commercial Code and other legal or regulatory requirements.

We have conducted our audit in accordance with generally accepted standards on the audit of management reports as applied in Austria.

Opinion

In our opinion, the management report has been prepared in accordance with legal requirements and is consistent with the financial statements.

Statement

Based on our knowledge gained in the course of the audit of the financial statements and the understanding of the Company and its environment, we did not note any material misstatements in the management report.

Linz, 4 April 2017

KPMG Austria GmbH
Wirtschaftsprüfungs- und Steuerberatungsgesellschaft

Mag. Ernst Pichler
Wirtschaftsprüfer
(Austrian Chartered Accountant)

This report is a translation of the original report in German, which is solely valid.
The financial statements together with our auditor's opinion may only be published if the financial statements and the management report are identical with the audited version attached to this report. Section 281 Paragraph 2 UGB (Austrian Commercial Code) applies.

STRABAG
STRABAG AG

STRABAG AG,
Spittal an der Drau, Austria

Annex II/1

Balance sheet as of 31 December 2016

Assets

	31.12.2016 EUR	31.12.2015 TEUR
A. Non-current assets:		
I. Intangible assets:		
1. Concessions, industrial property rights and similar rights as well as licences derived thereof	15,269.79	15
2. Goodwill	92,502.32	107
3. Advances paid	332,124.00	200
	439,896.11	322
II. Tangible assets:		
1. Properties, land rights equivalent real property, buildings including building on third part property	37,086,354.82	34,158
2. Technical equipment and machinery	37,587,510.50	40,607
3. Other facilities, furniture and fixtures and office equipment	35,293,505.96	34,076
4. Advances paid and facilities under construction	2,526,340.00	1,532
	112,493,711.28	110,373
III. Financial assets:		
1. Investments in subsidiaries	564,016,279.48	490,492
2. Loans to subsidiaries	0.07	0
3. Investments in participation companies	31,404,076.22	47,338
4. Loans to participation companies	5,288,568.00	5,289
5. Securities	22,951,875.48	22,952
6. Other loans	64,975.52	85
	623,725,774.77	566,136
	736,659,482.16	676,831
B. Current assets:		
I. Construction work in progress	1,105,224,289.67	1,386,425
less advance payments received	-1,020,298,167.34	-1,281,260
	84,926,122.33	105,165
II. Inventories:		
1. Raw materials and supplies	23,394,619.33	22,809
2. Services rendered, not yet chargeable	14,584,382.52	11,621
3. Land with unfinished construction	2,603,398.00	4,727
less advance payments received	0.00	-835
	2,603,398.00	3,892
4. Finished goods, land with finished construction	0.00	4
5. Prepayments	5,557,081.01	658
	48,539,480.86	38,883
III. Accounts receivable and other assets:		
1. Trade receivables	180,927,309.03	179,096
thereof remaining term of more than one year	7,440,436.97	2,328
2. Receivables from subsidiaries	453,161,208.92	441,027
thereof remaining term of more than one year	20,729,126.72	9,116
3. Receivables from participation companies	24,279,493.09	28,317
thereof remaining term of more than one year	-11,303,674.81	12,654
4. Receivables from joint ventures	64,272,218.46	48,357
5. Other receivables and assets	39,906,057.46	48,310
thereof remaining term of more than one year	801,086.69	15,520
	762,546,284.96	743,107
C. Accruals and deferrals	43,144,429.54	70,721
D. Deferred tax assets	937,158,297.69	957,876
	1,968,765.38	1,970
	1,078,542.75	0
	1,676,895,087.99	1,636,577

Equity and Liabilities

	31.12.2016 EUR	31.12.2015 TEUR
A. Equity:		
I. Subscribed and paid in nominal capital (share capital):	12,000,000.00	12,000
Subscribed nominal capital (share capital)		
II. Capital reserves:	14,170,597.00	14,171
1. Committed	400,140,104.11	400,140
2. Uncommitted	414,310,701.11	414,311
III. Retained earnings:		
Other reserves	8,157,330.57	8,157
IV. Unappropriated net profit (thereof profit brought forward EUR 221,891,457.70; previous year: TEUR 214,049)		
B. Provisions:	244,058,509.85	221,691
1. Provisions for severance payments	678,526,541.53	656,359
2. Provisions for pensions		
3. Provisions for taxes	44,567,869.00	42,590
4. Other provisions	6,841,568.00	6,049
	112,338.32	2,603
	168,273,722.06	142,485
	217,995,497.40	193,707
C. Accounts payable:		
1. Bank borrowings	114,647.96	1
thereof remaining term up to one year	114,647.96	1
2. Prepayments received	142,331,690.05	122,805
thereof remaining term up to one year	142,331,690.05	122,805
3. Trade payables	181,097,698.09	167,754
thereof remaining term up to one year	176,477,717.33	162,344
thereof remaining term of more than one year	4,619,980.76	5,410
4. Payables to subsidiaries	320,066,187.21	320,152
thereof remaining term up to one year	70,066,187.21	70,152
thereof remaining term of more than one year	250,000,000.00	250,000
5. Payables to participation companies	9,908,259.40	9,235
thereof remaining term up to one year	9,908,259.40	9,235
6. Payables to joint ventures	41,157,706.33	58,962
thereof remaining term up to one year	41,157,706.33	58,962
7. Other payables	84,975,774.01	88,950
thereof taxes	43,760,702.19	51,003
thereof social security liabilities	20,308,551.43	18,747
thereof remaining term up to one year	84,975,774.01	88,825
thereof remaining term of more than one year	0.00	125
D. Deferred income	779,569,955.06	785,859
	525,049,984.30	530,324
	254,519,970.76	255,535
	702,984.00	751
	1,676,895,087.99	1,636,677

STRABAG AG

STRABAG AG,
Spittal an der Drau, Austria

Annex I/2

Income Statement for the Financial Year 2016

	2016 EUR	2015 TEUR
1. Revenue (Sales)	2,095,546,564.29	2,028,921
2. Change in finished goods, work in progress and services not yet chargeable	-278,732,784.89	-68,155
3. Other operating income	17,880,501.94	17,323
4. Cost of materials and other purchased production services	-1,140,298,105.25	-1,292,023
5. Employee benefits expense	-505,061,467.12	-488,164
6. Depreciation	-37,087,851.35	-35,788
7. Other operating expenses	-162,322,263.71	-175,053
8. Subtotal of items 1 through 7 **(operating result)**	**-10,075,406.09**	-12,939
9. Income from investments (thereof from subsidiaries EUR 74,539,718.21; previous year: TEUR 168,490)	83,774,524.00	188,266
10. Income from other long-term securities and loans	424,459.03	530
11. Other interest and similar income (thereof from subsidiaries EUR 11,404,420.38; previous year: TEUR 15,331)	17,012,214.69	22,401
12. Income from disposal and write-up of financial assets and marketable securities	30,805,467.79	18,975
13. Expenses for financial assets and marketable securities:		
a) Depreciation for subsidiaries	*-20,287,109.84*	-74,866
b) Other depreciation	*-435,815.32*	-12,300
c) Other expenses for subsidiaries	*-64,323,170.49*	-107,125
d) Miscellaneous	*-19,408,586.34*	-109
14. Interest and similar expenses (thereof from subsidiaries EUR 8,422,116.11; previous year: TEUR 11,457)	-104,454,681.99	-194,400
15. Subtotal of items 9 through 14 **(financial result)**	-9,676,412.05	-14,113
16. Result before taxes	**17,885,571.47**	21,658
17. Taxes on income and gains:	**7,810,165.38**	8,718
a) Income tax	-1,615,348.22	-3,190
b) Tax allocation	12,401,935.11	2,001
c) Deferred tax income	3,570,399.88	0
18. Income after taxes = net income for the year	**14,356,986.77**	-1,189
19. Reversal of retained earnings	**22,167,152.15**	7,529
20. Profit for the period	0.00	314
21. Profit brought forward	**22,167,152.15**	7,843
22. Unappropriated net profit	221,891,457.70	214,049
	244,058,609.85	221,891

STRABAG
STRABAG AG

The operating earnings improved by TEUR 2,865 versus the previous year from TEUR -12,940 to TEUR -10,075.

The lower net income from investments can be explained by non-recurring items related to profit transfers and dividends from subsidiaries in the previous year. This led to a reduction in the net income from investments in the reporting year from TEUR 188,266 to TEUR 83,775. The income from investments was largely comprised of profit transfers and dividends from domestic subsidiaries in the amount of TEUR 16,848 (previous year: TEUR 78,874) and foreign subsidiaries in the amount of TEUR 67,351 (previous year: TEUR 109,921).

The opposite development was registered among the expenses from financial assets. The decrease in expenses from financial assets from TEUR 194,401 to TEUR 104,455 resulted mainly from lower impairments on investments in affiliated companies as well as lower expenses from group financing of subsidiaries.

The interest income fell slightly from TEUR 8,288 to TEUR 7,336 in the year under report. This development resulted mainly from the decline of the interest income from group companies.

Overall, the aforementioned conditions led to a decrease of the financial earnings in the reporting year from TEUR 21,658 to TEUR 17,886.

It was possible to compensate the lower net income from investments with an improvement of the operating result, leading to a slight increase of the earnings before interest and taxes from TEUR 430 in the previous year to TEUR 474.

The earnings before taxes fell in a year-on-year comparison by 10.42 % from TEUR 8,718 to TEUR 7,810.

Overall, the minor deviations in the earnings made only an unsubstantial impact on all profitability figures in comparison to 2015.

Upon consideration of income taxes in the amount of TEUR 14,357 (previous year: TEUR -1,189), this results in earnings after taxes and a net profit of TEUR 22,167 (previous year: TEUR 7,529).

After calculating the changes from reserves, and counting the retained profit brought forward from the previous year, this resulted in a balance sheet profit of TEUR 244,059 (previous year: TEUR 221,891).

FINANCIAL POSITION

	2016	2015
Net debt in TEUR[1]	286,953	105,839
Working capital in TEUR[2]	191,510	50,969
Equity ratio in %	40.5	40.1
Gearing ratio in %[3]	42.3	16.1

[1] Net debt = interest-bearing liabilities + non-current provisions – cash and cash equivalents
[2] Working capital = current assets – cash and cash equivalents – current liabilities
[3] Gearing ratio = net debt / equity

STRABAG
STRABAG AG

The equity grew year-on-year from TEUR 656,359 in 2015 to TEUR 678,527. This resulted in a slight improvement of the equity ratio from 40.1 % in the previous year to 40.5 % in the year under report.

The considerable increase of the net debt from TEUR 105,839 to TEUR 286,953 can be traced to the reduced cash and cash equivalents as a result of the acquisition of financial assets and the related increase of financial receivables from subsidiaries. This development is also reflected in the net gearing ratio, which grew from 16.1 % to 42.3 %.

The higher financial receivables from subsidiaries led to an increase of the working capital from TEUR 50,969 in the previous year to TEUR 191,510 in the year under report.

CASH FLOWS

	2016	2015
Cash flow from operating activities in TEUR	140,884	112,189
Cash flow from financing activities in TEUR	6,919	-5,699
Cash flow from investing activities in TEUR	-322,171	-111,060

The cash flow from operating activities of TEUR 140,884 in the reporting year was comprised of a positive cash flow from earnings as well as changes in receivables from and payables to subsidiaries on service accounting.

The inflow of cash and cash equivalents in the cash flow from financing activities in the amount of TEUR 6,919 resulted mainly from the changes in financial payables to subsidiaries.

The outflow of cash and cash equivalents in the cash flow from investing activities increased in the 2016 financial year from TEUR -111,060 to TEUR -322,171. Cash was used up by investments in non-current assets in the amount of TEUR -103,345 and through the increase of financing receivables from subsidiaries in the amount of TEUR -239,959. A positive impact on the cash flow from investing activities came from asset disposals in the amount of TEUR 21,133.

CAPTIAL EXPENDITURES

Intangible assets in the amount of TEUR 142 (previous year: TEUR 209) and property, plant and equipment in the amount of TEUR 40,326 (previous year: TEUR 27,629) were purchased in the 2016 financial year. The additions to financial assets amounted to TEUR 62,877 in the reporting year (previous year: TEUR 69,794) and mostly involved additions to the investments in affiliated companies.

COMPANY'S OUTLOOK AND RISK REPORT

OUTLOOK

In contrast to the economy as a whole, the construction sector in the 19 Euroconstruct countries registered slightly higher growth (+2.0 %) in 2016 than the year before (+1.8 %). The plus fell short of the original forecasts, however, which had predicted a clearer sign of recovery. The expectations for the coming years were also scaled back slightly. Nevertheless, thanks to the low interest environment and the subsequent appetite for real estate investments, the construction dynamism should still continue to outperform the general economy. The most recent Euroconstruct forecasts for the period 2017–2019 predict growth between +2.1 % and +2.2 %.

On a country-by-country basis, the development was again quite varied. The strongest growth was registered in Ireland, the Netherlands and Sweden.

Diese auszugsweise Fotokopie stimmt mit den darin wieder gegebenen Seiten des mir im Original vorliegenden, in die englische Sprache übersetzten Berichts über die Prüfung des Jahresabschlusses zum 31.12.2016 (einunddreißigsten Dezember zweitausendsechzehn) der STRABAG AG mit dem Sitz in Spittal an der Drau wort- und ziffernmäßig überein.----------

Wien, am 26.06.2017 (sechsundzwanzigsten Juni zweitausendsiebzehn). ----------

---

I hereby certify, that this copy in extracts is in full conformity with the reproduced pages of the original translated report on the audit of the financial statements for the year ended 31.12.2016 (december thirtyfirst, twothousandsixteen) of STRABAG AG having it's seat in Spittal an der Drau. ----------

Vienna, 26.06.2017 (June twentysixth, twothousandseventeen).----------

Dr. Elisabeth [illegible] ÖFFENTLICHE NOTARIN Wien - Nr. [illegible]

öffentliche Notarin
notary public

STRABAG
STRABAG AG

D.O.O. VODOVOD I KANALIZACIJA DANILOVGRAD

STRABAG
STRABAG AG

Auditor's Report

Report on the Financial Statements

We have audited the accompanying financial statements of

STRABAG AG,
Spittal/Drau, Austria,

that comprise the statement of financial position as of 31 December 2015, the income statement for the fiscal year then ended, and the notes.

Management's Responsibility for the Financial Statements

The Company's management is responsible for the preparation and fair presentation of these financial statements in accordance with Austrian Generally Accepted Accounting Principles and for such internal control as management determines is necessary to enable the preparation of financial statements that are free from material misstatement, whether due to fraud or error.

Auditors' Responsibility

Our responsibility is to express an opinion on these financial statements based on our audit. We conducted our audit in accordance with Austrian Standards on Auditing. Those standards require that we comply with International Standards on Auditing - ISA. In accordance with International Standards on Auditing, we are required to comply with ethical requirements and plan and perform the audit to obtain reasonable assurance about whether the financial statements are free from material misstatement.

An audit involves performing procedures to obtain audit evidence about the amounts and disclosures in the financial statements. The procedures selected depend on our judgment, including the assessment of the risks of material misstatement of the financial statements, whether due to fraud or error. In making those risk assessments, we considers internal control relevant to the entity's preparation and fair presentation of the financial statements in order to design audit procedures that are appropriate in the circumstances, but not for the purpose of expressing an opinion on the effectiveness of the entity's internal control. An audit also includes evaluating the appropriateness of accounting policies used and the reasonableness of accounting estimates made by management, as well as evaluating the overall presentation of the financial statements.

We believe that the audit evidence we have obtained is sufficient and appropriate to provide a basis for our audit opinion.

D.O.O. VODOVOD I KANALIZACIJA VIK DANILOVGRAD

253

STRABAG
STRABAG AG

Opinion

Our audit did not give rise to any objections. In our opinion, the financial statements present fairly, in all material respects, the financial position of the Company as of 31 December 2015, and its financial performance for the year then ended in accordance with Austrian Generally Accepted Accounting Principles.

Report on Other Legal Requirements (Management Report)

Pursuant to statutory provisions, the management report is to be audited as to whether it is consistent with the financial statements and as to whether the other disclosures are not misleading with respect to the Company's position. The auditor's report also has to contain a statement as to whether the management report is consistent with the financial statements.

In our opinion, the management report is consistent with the financial statements.

Linz, 6 April 2016

KPMG Austria GmbH
Wirtschaftsprüfungs- und Steuerberatungsgesellschaft

KPMG Austria GmbH Wirtschaftsprüfungs- und Steuerberatungsgesellschaft

Mag. Ernst Pichler
Wirtschaftsprüfer
(Austrian Chartered Accountants)

This report is a translation of the original report in German, which is solely valid.

The financial statements together with our auditor's opinion may only be published if the financial statements and the management report are identical with the audited version attached to this report. Section 281 Paragraph 2 UGB (Austrian Business Enterprise Code) applies.

D.O.O. VODOVOD I KANALIZACIJA ViK DANILOVGRAD

STRABAG
STRABAG AG

D.O.O. VODOVOD I KANALIZACIJA DAKOVO

STRABAG AG,
Spittal/Drau, Austria

255

Balance Sheet as of 31 December 2015

ASSETS

	31.12.2015 EUR	31.12.2014 TEUR
A. Non-current assets:		
I. Intangible assets:		
1. Concessions, industrial property rights and similar rights as well as licences derived thereof	14,658.38	14
2. Goodwill	106,848.83	121
3. Advances paid	200,373.00	0
	321,880.21	135
II. Tangible assets:		
1. Properties, land rights equivalent to real property, buildings including buildings on third part property	34,157,809.70	34,907
2. Technical equipment and machinery	40,606,750.12	49,801
3. Other facilities, furniture and fixtures and office equipment	34,075,952.55	33,972
4. Advances paid and facilities under construction	1,532,499.00	1,363
	110,373,011.37	120,043
III. Financial assets:		
1. Interests in subsidiaries	490,492,489.60	499,274
2. Loans to subsidiaries	0.07	0
3. Investments in participation companies	47,338,463.31	63,161
4. Loans to participation companies	5,288,568.00	5,289
5. Securities	22,951,875.55	29,834
6. Other loans	64,975.52	60
	566,136,372.05	597,618
	676,831,263.63	717,796
B. Current Assets:		
I. Construction work in progress	1,386,424,936.99	1,460,385
Advance payments received	-1,281,259,996.60	-1,311,486
	105,164,940.39	148,899
II. Inventories:		
1. Raw materials and supplies	22,808,933.10	22,145
2. Services rendered, not yet chargeable	11,520,511.10	8,157
3. Land with unfinished construction	*4,727,110.00*	3,607
less advance payments received	*-834,950.48*	0
	3,892,159.52	3,607
4. Finished goods, land with finished construction	4,000.00	4
5. Prepayments	657,878.66	18,720
	38,883,482.38	52,633
III. Accounts receivable and other assets:		
1. Trade receivables	179,096,488.19	210,144
2. Receivables from joint ventures	46,356,913.09	32,917
3. Receivables from subsidiaries	441,026,514.71	431,280
4. Receivables from participation companies	28,317,094.81	21,084
5. Other receivables and assets	48,309,545.90	53,533
	743,106,556.70	748,957
IV. Cash assets, including bank accounts	*70,720,675.25*	43,925
	957,875,654.72	994,414
C. Accruals and deferrals	1,969,804.09	2,557
	1,636,676,722.44	1,714,767

EQUITY AND LIABILITIES

	31.12.2015 EUR	31.12.2014 TEUR
A. Equity:		
I. Share capital	12,000,000.00	12,000
II. Capital reserves:		
1. Committed	*14,170,597.00*	14,171
2. Uncommitted	*400,140,104.11*	394,137
	414,310,701.11	408,307
III. Unappropriated net profit (thereof profit brought forward EUR 214,048,723.48; previous year: TEUR 202,372)	221,891,457.70	214,049
	648,202,158.81	634,356
B. Untaxed reserves:		
Valuation reserve due to special depreciations	10,649,187.70	10,963
C. Provisions:		
1. Provisions for severance payments	42,589,760.93	41,655
2. Provisions for pensions	6,049,198.00	6,279
3. Provisions for taxes	111,391.64	65
4. Other provisions	142,465,223.82	136,174
	191,215,574.39	184,173
D. Accounts payable:		
1. Bank borrowings	898.16	194
2. Prepayments received	122,805,376.82	106,287
3. Trade payables	187,754,489.14	215,580
4. Payables to joint ventures	56,961,505.62	82,682
5. Payables to subsidiaries	320,151,519.69	372,925
6. Payables to participation companies	9,235,263.34	7,263
7. Other payables (thereof taxes EUR 51,002,577.80; previous year: TEUR 53,350; thereof social security liabilities EUR 18,746,721.47; previous year: TEUR 17,503)	88,949,812.77	99,546
	785,858,865.54	884,477
E. Deferred income and credits	750,936.00	799
	1,636,676,722.44	1,714,767
Contingent liabilities	6,166,000.00	6,543

STRABAG AG

STRABAG AG,
Spittal/Drau, Austria

Income Statement for the 2015 Financial Year

	2015 EUR	2014 TEUR
1. Revenue (Sales)	2,024,916,137.93	1,873,992
2. Increase/decrease in work in progress	-68,154,779.07	147,534
3. Other operating income	21,327,544.91	30,307
4. Cost of materials and services	-1,319,924,030.17	-1,368,150
5. Employee benefits expenses (Personnel expense)	-488,163,842.77	-487,523
6. Depreciation	-35,788,317.77	-34,986
7. Other operating expenses	-147,152,406.16	-166,348
8. Subtotal of items 1 through 7 (operating result)	**-12,939,693.10**	-5,174
9. Income from investments (thereof from subsidiaries EUR 168,490,387.04; previous year: TEUR 62,455)	188,265,529.77	86,419
10. Income from other securities and long-term loans	529,951.52	570
11. Other interest and similar income (thereof from subsidiaries EUR 15,331,375.97; previous year: TEUR 16,797)	22,400,739.02	22,139
12. Income from disposal and write-up of financial assets and marketable securities	18,975,411.61	29,333
13. Expenses related to financial assets and marketable securities:		
a) Depreciation of investments in subsidiaries	*-74,866,469.68*	-92,266
b) Depreciation (others)	*-12,300,000.00*	-3,663
c) Expenses from subsidiaries	*-107,125,256.42*	-12,073
d) Miscellaneous	*-109,205.45*	-751
	-194,400,931.55	-108,753
14. Interest and similar expenses (thereof from subsidiaries EUR 11,456,513.82; previous year: TEUR 12,491)	-14,112,827.90	-15,224
15. Subtotal of item 9 through 14 (financial result)	**21,657,872.47**	14,483
16. Results from ordinary business activities	**8,718,179.37**	9,309
17. Taxes on income and gains:		
a) Income tax	-3,190,248.69	-234
b) Tax allocation	2,000,835.97	2,288
	-1,189,412.72	2,054
18. Net income for the year	**7,528,766.65**	11,363
19. Changes in untaxed reserves	313,967.57	314
20. Profit for the period	**7,842,734.22**	11,677
21. Profit brought forward	214,048,723.48	202,372
22. Unappropriated net profit	**221,891,457.70**	214,049

D.O.O. VODOVOD I KANALIZACIJA VIK DANILOVGRAD

STRABAG
STRABAG AG

KPMG

STRABAG AG, Spittal/Drau, Austria
Translation of the local Report on the Audit of the Financial Statements for the Year ended of 31 December 2014
7 April 2015

Auditor's Report

Report on the Financial Statements

We have audited the accompanying financial statements, including the accounting system, of

STRABAG AG,
Spittal/Drau, Austria,

for the fiscal year from **1 January to 31 December 2014.** These financial statements comprise the balance sheet as of 31 December 2014, the income statement for the fiscal year ended 31 December 2014, and the notes.

Management's Responsibility for the Financial Statements and for the Accounting System

The Company's management is responsible for the accounting system and for the preparation and fair presentation of these financial statements in accordance with Austrian Generally Accepted Accounting Principles. This responsibility includes: designing, implementing and maintaining internal control relevant to the preparation and fair presentation of financial statements that are free from material misstatement, whether due to fraud or error; selecting and applying appropriate accounting policies; and making accounting estimates that are reasonable in the circumstances.

Auditors' Responsibility and Description of Type and Scope of the statutory audit

Our responsibility is to express an opinion on these financial statements based on our audit. We conducted our audit in accordance with laws and regulations applicable in Austria and Austrian Standards on Auditing. Those standards require that we comply with professional guidelines and that we plan and perform the audit to obtain reasonable assurance about whether the financial statements are free from material misstatement.

An audit involves performing procedures to obtain audit evidence about the amounts and disclosures in the financial statements. The procedures selected depend on the auditor's judgment, including the assessment of the risks of material misstatement of the financial statements, whether due to fraud or error. In making those risk assessments, the auditor considers internal control relevant to the Company's preparation and fair presentation of the financial statements in order to design audit procedures that are appropriate in the circumstances, but not for the purpose of expressing an opinion on the effectiveness of the Company's internal control. An audit also includes evaluating the appropriateness of accounting policies used and the reasonableness of accounting estimates made by management, as well as evaluating the overall presentation of the financial statements.

We believe that the audit evidence we have obtained is sufficient and appropriate to provide a basis for our audit opinion.

VODOVOD I KANALIZACIJA VIK DANILOVGRAD

257

STRABAG
STRABAG AG

Opinion

Our audit did not give rise to any objections. In our opinion, which is based on the results of our audit, the financial statements comply with legal requirements and give a true and fair view of the financial position of the Company as of 31 December 2014 and of its financial performance for the year from 1 January to 31 December 2014 in accordance with Austrian Generally Accepted Accounting Principles.

Report on Other Legal Requirements (Management Report)

Pursuant to statutory provisions, the management report is to be audited as to whether it is consistent with the financial statements and as to whether the other disclosures are not misleading with respect to the Company's position. The auditor's report also has to contain a statement as to whether the management report is consistent with the financial statements.

In our opinion, the management report is consistent with the financial statements.

Linz, 7 April 2015

KPMG Austria GmbH
Wirtschaftsprüfungs- und Steuerberatungsgesellschaft

Mag. Ernst Pichler
Wirtschaftsprüfer

ppa Mag. Christoph Karer
Wirtschaftsprüfer
(Austrian Chartered Accountants)

This report is a translation of the original report in German, which is solely valid.

Publication of the financial statements together with our auditor's opinion may only be made if the financial statements and the management report are identical with the audited version attached to this report. Section 281 Paragraph 2 UGB (Austrian Business Enterprise Code) applies.

STRABAG
STRABAG AG

STRABAG AG
Spittal/Drau, Austria

Balance Sheet as of 31 December 2014

ASSETS

	31.12.2014 EUR	31.12.2013 TEUR
A. Non-current assets:		
I. Intangible assets:		
1. Concessions, industrial property rights and similar rights as well as licences derived thereof	14,350.43	10
2. Goodwill	121,095.34	135
	135,445.77	146
II. Tangible assets:		
1. Properties, land rights equivalent to real property, buildings including buildings on third part property	34,907,478.81	36,024
2. Technical equipment and machinery	49,800,877.05	60,871
3. Other facilities, furniture and fixtures and office equipment	33,971,624.47	32,862
4. Advances paid and facilities under construction	1,363,309.24	3
	120,043,289.57	129,761
III. Financial assets:		
1. Interests in subsidiaries	499,273,817.84	533,553
2. Loans to subsidiaries	0.07	4,614
3. Investments in participation companies	63,161,368.96	67,659
4. Loans to participation companies	5,288,568.00	0
5. Securities	29,833,871.42	30,197
6. Other loans	59,975.52	60
	597,617,601.81	636,083
	717,796,337.15	765,989
B. Current Assets:		
I. Construction work in progress	1,460,385,239.22	1,310,391
Advance payments received	-1,311,486,344.08	-1,175,585
	148,898,895.14	134,806
II. Inventories:		
1. Raw materials and supplies	22,145,153.86	20,217
2. Services rendered, not yet chargeable	8,156,955.41	9,501
3. Land with unfinished construction less advance payments received	*3,606,983.00*	4,606
	0.00	-134
4. Finished goods, land with finished construction	3,606,983.00	4,472
5. Prepayments	4,000.00	4
	18,720,146.72	10,034
	52,633,238.99	44,227
III. Accounts receivable and other assets:		
1. Trade receivables	210,143,744.86	287,953
2. Receivables from joint ventures	32,916,641.52	54,038
3. Receivables from subsidiaries	431,279,567.10	400,343
4. Receivables from participation companies	21,083,830.14	31,968
5. Other receivables and assets	53,533,431.82	17,624
	748,957,215.44	791,925
IV. Cash assets, including bank accounts	*43,924,784.11*	85,569
	994,414,133.68	1,056,528
C. Accruals and deferrals	2,556,863.01	1,555
	1,714,767,333.84	1,824,072
Contingent liabilities		

EQUITY AND LIABILITIES

	31.12.2014 EUR	31.12.2013 TEUR
A. Equity:		
I. Share capital	12,000,000.00	12,000
II. Capital reserves:		
1. Committed	*14,170,597.00*	14,171
2. Uncommitted	*394,136,604.11*	393,949
	408,307,201.11	408,119
III. Unappropriated net profit (thereof profit brought forward EUR 202,372,166.51; previous year: TEUR 194,579)	214,048,723.48	202,372
	634,355,924.59	622,491
B. Untaxed reserves:		
Valuation reserve due to special depreciations	10,963,155.27	11,277
C. Provisions:		
1. Provisions for severance payments	41,654,698.65	38,443
2. Provisions for pensions	6,279,245.00	6,440
3. Provisions for taxes	64,631.33	1,200
4. Other provisions	136,174,219.42	157,756
	184,172,794.40	203,840
D. Accounts payable:		
1. Bank borrowings	193,575.21	511
2. Prepayments received	106,286,774.76	152,420
3. Trade payables	215,580,326.23	234,102
4. Payables to joint ventures	82,681,769.69	127,717
5. Payables to subsidiaries	372,925,425.88	367,289
6. Payables to participation companies	7,263,107.62	5,111
7. Other payables (thereof taxes EUR 53,350,139.75; previous year: TEUR 60,894; thereof social security liabilities EUR 17,503,115.35; previous year: TEUR 16,110)		
	99,545,592.19	98,468
E. Deferred income and credits	884,476,571.58	985,617
	798,888.00	847
	1,714,767,333.84	1,824,072
Contingent liabilities	6,542,954.32	15,356

STRABAG AG

STRABAG AG,
Spittal/Drau, Austria

Income Statement for the 2014 Financial Year

	2014 EUR	2013 TEUR
1. Revenue (Sales)	1,873,991,910.62	2,050,955
2. Increase/decrease in work in progress	147,533,530.94	-58,069
3. Other operating income	30,307,099.60	31,589
4. Cost of materials and services	-1,368,149,740.96	-1,390,917
5. Employee benefits expenses (Personnel expense)	-487,523,422.01	-488,014
6. Depreciation	-34,985,974.23	-33,214
7. Other operating expenses	-166,347,779.00	-150,528
8. Subtotal of items 1 through 7 (operating result)	**-5,174,375.04**	-38,198
9. Income from investments (thereof from subsidiaries EUR 62,455,438.10; previous year: TEUR 127,976)	86,418,898.41	135,647
10. Income from other securities and long-term loans	570,171.53	711
11. Other interest and similar income (thereof from subsidiaries EUR 16,796,905.86; previous year: TEUR 20,015)	22,138,551.00	24,631
12. Income from disposal and write-up of financial assets and marketable securities	29,332,529.48	6
13. Expenses related to financial assets and marketable securities:		
a) Depreciation of investments in subsidiaries	*-92,265,992.54*	-62,560
b) Depreciation (others)	*-3,663,365.00*	-10,000
c) Expenses from subsidiaries	*-12,072,740.36*	-16,874
d) Miscellaneous	*-751,222.59*	-4,685
	-108,753,320.49	-94,118
14. Interest and similar expenses (thereof from subsidiaries EUR 12,491,425.59; previous year: TEUR 16,541)	-15,223,943.17	-18,670
15. Subtotal of item 9 through 14 (financial result)	**14,482,886.76**	48,207
16. Results from ordinary business activities	**9,308,511.72**	10,008
17. Taxes on income and gains:		
a) Income tax	-234,358.85	-4,468
b) Tax allocation	2,288,436.48	1,935
	2,054,077.63	-2,533
18. Net income for the year	**11,362,589.35**	7,476
19. Changes in untaxed reserves	313,967.62	317
20. Profit for the period	**11,676,556.97**	7,793
21. Profit brought forward	202,372,166.51	194,579
22. Unappropriated net profit	**214,048,723.48**	202,372

VIK DANILOVGRAD

STRABAG
STRABAG AG

FINANCIAL PERFORMANCE

	2014	2013
Revenue in TEUR (Sales)	1,873,992	2,050,955
Earnings before interest and taxes in TEUR (EBIT)	2,394	4,047
Return on sales in % (ROS)[1]	0.1	0.2
Return on equity in % (ROE)[2]	1.5	1.6
Return on investment in % (ROI)[3]	0.1	0.2

The revenue in the 2014 financial year decreased from TEUR 2,050,955 to TEUR 1,873,992, which corresponds to a decline of 0.6 % nationally and 8.0 % internationally. The previous year's foreign revenue had included the completion of the large-scale Olympic Village Sochi project in Russia. The 2014 revenue also remained at a high level, due in part to the completion of the following large-scale projects:

a.) In Austria

- New construction and renovation of the main workshop Simmering (Vienna's municipal transportation agency): production, delivery and assembly of steel, iron and façade works, Vienna
- Donau City Tower 1, production of a glass element façade, Vienna
- General overhaul of road tunnel in Niklasdorf, Styria
- General overhaul as well as attic conversion of an office building at Schottenring 19, 1010 Vienna
- Construction of office building "2nd Central Office im Park" at the old Vienna North Station, Walcherstraße 11 and 11A. After completion, the building will receive certification from the Austrian Sustainable Building Council (ÖGNI). The office project is the first ÖGNI pre-certified property in Austria.
- Residential complex at Krausegasse 7, construction of 108 apartments with underground parking, Vienna
- Residential complex at Walcherstraße 5 and 5A, construction of 138 apartments with underground parking, Vienna
- Residential complex at Plössigasse 15 and 17, construction of 48 apartments with underground parking, Vienna

b.) Abroad

- Construction of the A1 motorway section between Deva and Orastie, Romania. Around 85 % of the order was financed using EU funds as well as funds from the Romanian national budget.

The work in progress and services rendered, not yet chargeable increased by TEUR 147,534 (previous year: reduction of work in progress by TEUR 58,069). The number of projects which were valued within the scope of work in progress grew from 836 to 851.

The operating result improved by TEUR 33,024 over the previous year to TEUR -5,174 (previous year: TEUR -38,198). Given the nearly constant output volume, this growth can be explained by the implementation of reorganizational and cost efficiency measures, on the one hand and by the lower burden from impending losses, on the other hand.
The increase of the other operating expenses results from the high transfer of losses from joint ventures in the amount of TEUR 35,187 (previous year: TEUR 26,119) and currency exchange differences in the rouble zone in the amount of TEUR 15,839 (previous year: TEUR 2,770).

The net income from investments, which was extraordinarily high in 2013 (TEUR 136,358), fell back to TEUR 86,989 in the year under report. This was mainly due to the reduction of the

[1] ROS = EBIT / revenue
[2] ROE = EBT / ø equity
[3] ROI = EBIT / ø total capital

domestic net income from investments from TEUR 88,777 to TEUR 39,874, while retained profits from a concession company were used for the operation of a motorway. In comparison, the foreign net income from investments could be held nearly constant (2014: TEUR 47,115, 2013: TEUR 47,581).

The significantly higher depreciation of investments in subsidiaries from TEUR 62,560 to TEUR 92,266 were necessary due to continuing losses from subsidiaries that resulted in long-term lower company value.
The interest income improved from TEUR 5,961 to TEUR 6,915 in the year under report. This growth resulted mainly from the higher other interest income (in particular from the "ROGSIBAL Limited Liability Company" loan related to the Sochi project that was completed in the previous year) and default interest from the Romanian permanent establishment.

Overall, it was therefore not possible to match the previous year's financial result of TEUR 48,207, which instead settled at TEUR 14,483 in the year under report.

As a result, the earnings before interest and taxes fell from TEUR 4,047 in the previous year to TEUR 2,394 despite the significantly improved operating result.

The improved year-on-year interest income led to a lower decline in results from ordinary business activities, which was down TEUR 699 from TEUR 10,008 in the previous year to TEUR 9.309.

Overall, the minor deviations in the earnings made only an unsubstantial impact on all profitability figures.

After considering income taxes in the amount of TEUR 2,054 (previous year: TEUR -2,533), the result is a net profit of TEUR 11,363 (previous year: TEUR 7,476). The lower tax expense from the permanent establishments and the tax allocation from the parent company resulted in tax income in the year under report. In the previous year, the tax results had been burdened mainly by income taxes related to the completion of the large Olympic Village Sochi project in Russia.

After calculating the changes from untaxed reserves, and counting the retained profit brought forward from the previous year, this resulted in a balance sheet profit of TEUR 214,049 (previous year: TEUR 202,372) in the reporting year.

FINANCIAL POSITION AND CASH FLOWS

	2014	2013
Net debt in TEUR[1]	58,640	55,164
Working capital in TEUR[2]	-69,565	-85,477
Equity ratio in %	37.6	34.7
Gearing ratio in %[3]	9.1	8.7

The equity grew year-on-year from TEUR 622,491 in 2013 to TEUR 634,356. The significant increase of the equity ratio from 34.7 % in the previous year to 37.6 % in the year under report was additionally supported by the reduction of liabilities.

Despite the high reduction of non-current provisions, the growth of interest-bearing liabilities and the simultaneous reduction of cash and cash equivalents contributed to a slight increase of the net debt from TEUR 55,164 to TEUR 58,640. The change of the interest-bearing liabilities largely

[1] Net debt = interest-bearing liabilities + non-current provisions – cash and cash equivalents
[2] Working capital = short-term current assets – cash and cash equivalents – current liabilities
[3] Gearing ratio = net debt / equity

VIK DANILOVGRAD

resulted from financing received and from cash clearing of subsidiaries. This development is also reflected in the net gearing ratio, which grew from 8.7 % to 9.1 %.

In the same period, the working capital improved by TEUR 15,912 to TEUR -69,565 (previous year: TEUR -85,477). This was due to the disproportionate decline of the non-interest-bearing current liabilities, which can be explained in particular by the lower advance payments received on orders and by the payables to joint ventures. In terms of the advance payments received, the previous year's high order backlog resulted from the completion of the A1 motorway project between Deva and Orastie in Romania during the financial year.
The reduction of payables to joint ventures was influenced by the catch-up of start-up losses for domestic tunnel projects, on the one hand, and the profit transfer from several completed projects in transportation infrastructures and civil engineering, on the other hand.
The payment of the outstanding amount for construction projects finished in Romania in the previous years led to a considerable reduction of the short-term current assets.

	2014	2013
Cash flow from operating activities in TEUR	71,484	143,425
Cash flow from financing activities in TEUR	9,686	-38,196
Cash flow from investing activities in TEUR	-90,139	-85,979

Based on the positive cash flow from earnings in the amount of TEUR 93,205, the cash flow from operating activities, which reached TEUR 71,484 in the year under report, was influenced by the following significant outflows: the strong decline of payables to joint ventures and the advances from clients for work in progress (backlog) as well as the growth of the other receivables. The high reduction of the trade receivables and the receivables from joint ventures as well as the changes in receivables from/payables to subsidiaries had a positive effect on liquidity.

The cash flow from financing activities (TEUR 9,686) was mainly the result of the inflow of cash and cash equivalents as part of the group financing and of cash clearings in the amount of TEUR 10,003.

The outflow from the cash flow from investing activities amounted to TEUR -90,139 in the 2014 financial year. Cash was used up by the investments in non-current assets in the amount of TEUR -73,293 and the increase of the financial receivables from subsidiaries in the amount of TEUR -46,786. The asset disposals resulted in an inflow of TEUR 29,940; the increase over the previous year is due in particular to the disposals of non-current assets for road construction to Moldova.

INVESTMENTS

In the 2014 financial year, intangible assets in the amount of TEUR 11 (previous year: TEUR 1) and property, plant and equipment in the amount of TEUR 27,880 (previous year: TEUR 38,898) were acquired. The additions to the financial assets in the reporting year amounted to TEUR 50,879 (previous year: TEUR 56,803) and concern mainly additions to investments in subsidiaries.

STRABAG
STRABAG AG

Form FIN - 2: Average Annual Construction Turnover

Each Tenderer or member of a JVCA must fill in this form

Annual Turnover Data for the Last 3 Years (Construction only)			
Year	Amount Currency	Exchange Rate	EURO Equivalent
2014			
2015			
2016			
Average Annual Construction Turnover			

The information supplied should be the Annual Turnover of the Tenderer or each member of a JVCA in terms of the amounts billed to clients for each year for work in progress or completed, converted to EUROs at the rate of exchange at the end of the period reported.

264

Form FIN - 2: Average Annual Construction Turnover

Each Tenderer or member of a JVCA must fill in this form

STRABAG AG AUSTRIA

Annual Turnover Data for the Last 3 Years (Construction only)			
Year	Amount Currency	Exchange Rate	EURO Equivalent
2014	1,567.67 mill.Euro	n.a	1,567.67 mill.Euro
2015	1,494.52 mill.Euro	n.a	1,494.52 mill.Euro
2016	1,559.29 mill.Euro	n.a	1,559.29 mill.Euro
	Average Annual Construction Turnover		1,540.49 mill.Euro

The information supplied should be the Annual Turnover of the Tenderer or each member of a JVCA in terms of the amounts billed to clients for each year for work in progress or completed, converted to EUROs at the rate of exchange at the end of the period reported.

STRABAG
STRABAG AG

KPMG Austria GmbH
Wirtschaftsprüfungs- und
Steuerberatungsgesellschaft
Kudlichstraße 41
4020 Linz, Austria

T +43 732 69 38 - 0
F +43 732 69 38 - 2245
kpmg.at

CONFIRMATION

KPMG Austria GmbH is auditor of STRABAG AG, Spittal/Drau, Austria. As auditor of the financial statements we confirm, that following figures are presented in the annual financial statements of STRABAG AG, Spittal/Drau, Austria:

Fiscal year	€
2012	2,223,230,907.57
2013	2,050,955,125.46
2014	1,873,991,910.62
2015	2,028,920,828.63
2016	2,095,546,564.29

The confirmation reflects all known facts and circumstances up to the date of this report. Any update of the report is not within the scope of our engagement and will therefore not be provided. We are not responsible for advising you of more recent information and developments.

The confirmation was based on the "General Conditions of Contract for the Public Accounting Professions". Through knowledge and use of the information contained in this report every receiver of this report confirms to accept the regulations included in these "General Conditions of Contract for the Public Accounting Professions" (including the regulations in relation to our professional liability in section 8) and to accept their validity in relation to us.

KPMG Austria GmbH Wirtschaftsprüfungs- und Steuerberatungsgesellschaft

Linz, 7th June 2017

KPMG Austria GmbH
Wirtschaftsprüfungs- und Steuerberatungsgesellschaft

STRABAG AG

Form FIN - 3: Financial Resources

Specify proposed sources of financing, such as liquid assets, unencumbered real assets, lines of credit, and other financial means, net of current commitments, available to meet the total construction cash flow demands of the subject contract or contracts as indicated in Tender Data, Para 3.2 (Qualifying requirement), Clause 3.2.3.3.

Financial Resources		
No.	Source of financing	Amount (EURO equivalent)
1		
2		
3		
4		

Note: For each source of financing add a *Confirmation of Credit Facilities* signed by your bankers:

Confirmation of Credit Facilities

We _____ declare that we are willing to offer banking facilities in favour of _____ *(the name of the Tenderer)* for the sum of at least * _____ **EURO** *(in words* _____*)* relating to the execution of Works on the project

_____

Bank seal

_____
Place & date

_____
Name and signature of Bank's representative

**** total requested credit facilities must meet criteria stated in Table 2.3, Clause 2.3.3, Financial Resources, for a Single Entity (500,000.00 EURO), Partner of a JVCA (min. 15% = 75,000.00 EURO) or Leading Partner of a JVCA (min. 40% = 200,000.00 EURO)***

Form FIN - 3: Financial Resources

Specify proposed sources of financing, such as liquid assets, unencumbered real assets, lines of credit, and other financial means, net of current commitments, available to meet the total construction cash flow demands of the subject contract or contracts as indicated in Tender Data, Para 3.2 (Qualifying requirement), Clause 3.2.3.3.

Financial Resources		
No.	Source of financing	Amount (EURO equivalent)
1	Unicredit Bank Austria	500.000,00
2		
3		
4		

Note: For each source of financing add a *Confirmation of Credit Facilities* signed by your bankers:

Confirmation of Credit Facilities

We Unicredit Bank Austria AG declare that we are willing to offer banking facilities in favour of STRABAG AG *(the name of the Tenderer)* for the sum of at least ***500.000,00 EURO** (in words fivehundredthousand)* relating to the execution of Works on the project REHABILITATION OF EXISTING AND CONSTRUCTION OF NEW SEWERS; Tender No: EBRD ME DAN 9000, Procurement ref: 8733-IFT-41252

UniCredit Bank Austria AG
8087 / Multinational Corporates Carinthia
Karfreitstrasse 13, 9020 Klagenfurt am Wörthersee

Klagenfurt, 29.8.2017 — *Bank seal*

Place & date

Mag. Günter Oremus — Wiltschnig

Name and signature of Bank's representative

**** total requested credit facilities must meet criteria stated in Table 2.3, Clause 2.3.3, Financial Resources, for a Single Entity (500,000.00 EURO), Partner of a JVCA (min. 15% = 75,000.00 EURO) or Leading Partner of a JVCA (min. 40% = 200,000.00 EURO)***

STRABAG
STRABAG AG

Raiffeisen Bank International

D.O.O. "Vodovod i kanalizacija" Danilovgrad
Caja Scepanovica bb Danilovgrad
81410 State of Montenegro

Vienna, 25.08.2017/noa

REHABILITATION OF EXISTING AND CONSTRUCTION OF NEW SEWERS; Tender No: EBRD ME DAN 9000
Procurement ref: 8733-IFT-41252

Dear Sirs,

we respond to your inquiry subject to the following reservations:

- We supply all this information according to our actual knowledge and without any obligation or liability on our part; the information has to be treated strictly confidential.
- We assume no obligation to investigate on, or to notify you of any changes of such information or any events by which such information becomes or reveals to be incorrect or changed.
- This response is given subject to our "General Business Conditions", and to the provisions of Austrian Federal law.
- You are not allowed to pass on this information to third parties without our prior written consent.
- If you do not accept these reservations, you shall be obliged not to make any use of this information and you shall return this original letter and all copies thereof to us immediately.

Raiffeisen Bank International AG • Am Stadtpark 9, 1030 Vienna, Austria • Tel: +43-1-71707-0 • Fax: +43-1-71707-1715 • www.rbinternational.com • Postal address: P.O. Box 50, 1010 Vienna • Telex: 08720001 RZBA • Seat of the company: Vienna • Registered under FN 122119m at Handelsgericht Wien • VAT-No.: ATU 57531200 • Data Processing Register-No.: 2400277
Swift Code: RZBAATWW • Bank Sort Code: 31000 • Member of the Unico Banking Group

STRABAG
STRABAG AG
We print on CO_2 neutral paper

STRABAG AG (commercial register No. FN 61689 w), headquartered at Ortenburgerstrasse 27, A-9800 Spittal an der Drau, is in the majoritarian ownership of the STRABAG SE group. It is one of Austria's largest and most productive construction groups and ranks among the six biggest construction enterprises in Europe.

The owners of STRABAG SE Group are the family Haselsteiner, the UNIQA-Group, the Raiffeisen-Holding NÖ-Wien-Group as well as the Basic-Element-Group of Oleg Deripaska.

STRABAG AG carries out contracts in the field of road and motorway construction, structural and civil engineering, tunneling construction, in the wide area of environmental technology in Austria and abroad; as single contractor or together with other construction companies in joint ventures.

From our point of view the company´s past and current international activities raise no doubts about its ability to perform under large international contracts.

Group-Output: in Mio. EUR

13.491	01.01.2016 -	31.12.2016
14.290	01.01.2015 -	31.12.2015
13.566	01.01.2014 -	31.12.2014

STRABAG AG-Turnover: in Mio. EUR

2.096	01.01.2016 -	31.12.2016
2.025	01.01.2015 -	31.12.2015
1.874	01.01.2014 -	31.12.2014

We have been in contact with above mentioned construction company for many years and consider this firm as one of the best managed Austrian companies with excellent performance also in difficult market environment and a convincing track record.

Furthermore we confirm that – throughout our cooperation - a.m. company has fulfilled all its financial obligations with our bank in time.

We hereby may notify you, that, to our knowledge, Strabag AG has access to sufficient liquid assets, unencumbered real assets, lines of credit and other financial means to meet the construction cash flow for the contract, estimated as not less than EUR 500.000,00 for a period of 4 months.

Furthermore we inform you, that the entire Strabag SE group has access to financing facilities up to a total maximum amount of approximately EUR 50.000.000,–.

This letter is issued without any engagement or liability on our part.

With kind regards

Raiffeisen Bank International
RAIFFEISEN BANK INTERNATIONAL AG
Am Stadtpark 9, 1030 Vienna, Austria

STRABAG
STRABAG AG

270

Form FIN - 4: Current Contract Commitments / Works in Progress

Tenderers and each partner to a JVCA should provide information on their current commitments on all contracts that have been awarded, or for which a letter of intent or acceptance has been received, or for contracts approaching completion, but for which an unqualified, full completion certificate has yet to be issued.

Current Contract Commitments					
No.	Name of Contract	Employer's Contact Address, Tel, Fax	Value of Outstanding Work [Current EURO Equivalent]	Estimated Completion Date	Average Monthly Invoicing Over Last Six Months [EURO/month]
1	**BBT Eisackunterquerung** (STRABAG AG & STRABAG Italia - 39%)	Galleria di Base del Brennero, Bahnhofplatz 1 39100 Bolzano, ITALY	82,72 Mil.Eur	09/2024	1,15
2	**UUT 21 Ulriken Tunnel**	Jernbaneverket Stortorvet 7 0010 Oslo, Norwegen	22,81 Mil.Eur	10/2021	0,63
3	**5th Line Water Supply to Jerusalem**	Mekorot Israel National Water Company 9 Lincoln St. 61201 Tel-Aviv, Israel	75,47 Mil.Eur	12/2020	3,14
4	**Radlooncology Donau Hospital**	VAMED, Standortentwicklung und Engineering GmbH & Co KG Sterngasse5,1230 Wien	9,02 Mil.Eur	05/2019	0,75
5	**ARGE Tunnel BL Tulfes - Pfons** (STRABAG AG - 51 %)	Brenner Basistunnel BBT, SE Grabenweg 3 6020 Innsbruck	38,31 Mil.Eur	04/2019	3,19
6	**Koralm Tunnel KAT 2** (STRABAG AG - 85 %)	ÖBB Infrastruktur AG GB Neu- und Ausbau Tel: +43 (316) 93 000-6152 Herr DI Erhard Katzianer	79,38 Mil.Eur	01/2019	6,62

271

STRABAG
STRABAG A

7	**Austria Campus – North Station**	ACO SECHS Immobilien GmbH & CO OG Freyung 3, 1010 Wien	0,00 Mil.Eur	06/2018	0,52
8	**Alto Maipo, Chile** (STRABAG Sociedad por Acciones 100% = Subsidiary of STRABAG AG, Austria)	AES Gener energia confiable Rosario Norte 532, Piso 19, las Condes Santiago / Chile Mr. Christian Schild Tel. +56 2 26868592	143,10 Mil.Eur	03/2019	11,93
9	**Arge Rohtang Pass Highway Tunnel Lot 1,** Indien (STRABAG AG - 60%)	Border Roads Organisation -Governmen of India, Seema Sadak Bhawan, Ring Road, 110010 Delhi	-80,37 Mil.Eur	12/2017	6,70

-PLEASE SEE THE ATTACHMENT-

272

STRABAG
STRABAG AG

Current Contract Commitments / Works in Progress.

STRABAG

Due the size of our company it would go beyond the scope of this form to list all the awarded contracts so this is only an excerpt of the most important contracts awarded by STRABAG AG and it´s Subsidiaries

No.	Contract Name	Employer	Project description	Value of outstanding works [Mio EUR]					Contract Value	Begin of construction		Estimated Completion Date	
				Outstanding per 03/2017	12/2017	12/2018	Monthly average	Annual average		Month	Year	Month	Year
1	**BBT Eisackunterquerung** (STRABAG AG & STRABAG Italia - 39%)	Galleria di Base del Brennero Bahnhofplatz 1 39100 Bolzano ITALY	crossing under the river "Eisack" with two main tubes and two additional tubes to connect the railway network	110,29	96,50	82,72	1,15	13,79	301,27	01	2015	09	2024
2	**UUT 21 Ulriken Tunnel**	Jernbaneverket Stortorvet 7 0010 Oslo, Norwegen	Construction of the section UUT 21 of the Ulrike tunnel in Bergen.	38,02	30,42	22,81	0,63	7,60	152,58	06	2014	10	2021
3	**5th Line Water Supply to Jerusalem**	Mekorot Israel National Water Company 9 Lincoln St. 61201 Tel-Aviv, Israel	A tunnel with a length of 13 kilometers and a diameter of 3.90 meters will be constructed between Eshtaol and Motza (Kesalon Tunnel).	150,93	113,20	75,47	3,14	37,73	153,41	04	2016	12	2020
4	**Radiooncology Donau Hospital**	VAMED Standortentwicklung und Engineering GmbH & Co KG Sterngasse 5, 1230 Wien	Construction of the Radiooncology in hospital Donauspital. General contractor incl. Design.	27,06	18,04	9,02	0,75	9,02	30,26	01	2017	05	2019
5	**ARGE Tunnel BL Tulfes - Pfons** (STRABAG AG - 51 %)	Brenner Basistunnel BBT SE Grabenweg 3 6020 Innsbruck	Tunnel & gallery construction Total length: TBM 15,000 m Cyclical Headings 19,006 m	114,94	76,63	38,31	3,19	38,31	377,30	09	2014	04	2019

STRABAG AG

No.	Contract Name	Employer	Project description	Value of outstanding works [Mio EUR]					Contract Value	Begin of construction		Estimated Completion Date	
				Outstanding per 03/2017	12/2017	12/2018	Monthly average	Annual average		Month	Year	Month	Year
6	**Koralm Tunnel KAT 2** (STRABAG AG - 85 %)	ÖBB Infrastruktur AG GB Neu- und Ausbau Tel: +43 (316) 93 000-6152 Herr DI Erhard Katzianer	Railway tunnel with two single-track tubes, length each 20km, tunnel drive for the first 2.5km in each tube in NATM and then TBM drive.	238,15	158,77	79,38	6,62	79,38	569,92	01	2011	01	2019
7	**Austria Campus - North Station**	ACO SECHS Immobilien GmbH & CO OG Freyung 3 1010 Wien	The Austria Campus will be constructed on the area of the former North Station. The project comprise 5 buildings for offices, hotel, shops and event halls.	12,43	6,22	0,00	0,52	6,22	51,04	09	2015	06	2018
8	**Alto Maipo, Chile** (STRABAG Sociedad por Acciones 100% = Subsidiary of STRABAG AG, Austria)	AES Gener energia confiable Rosario Norte 532, Piso 19, las Condes Santiago / Chile Mr. Christian Schild Tel. +56 2 26868592	Complex tunnel construction project with NATM and TBM construction method for the hydroelectric power station in Alto Maipo/Chile.	429,31	286,21	143,10	11,93	143,10	763,41	12	2013	03	2019
9	**Arge Rohtang Pass Highway Tunnel Lot 1,** Indien (STRABAG AG - 60%)	Border Roads Organisation - Government of India, Seema Sadak Bhawan, Ring Road, 110010 Delhi	Construction of a two-lane road tunnel with a length of 8.8 km with integrated escape tunnel under the roadway by means of NATM (New Austrian Tunnelling Method).	80,37	0,00	-80,37	6,70	80,37	245,38	07	2008	12	2017

274

STRABAG AG

Form EXP - 1: General Construction Experience

Each Tenderer or member of a JVCA must fill in this form

General Construction Experience				
Starting Month Year	Ending Month Year	Years	Contract Identification and Name Name and Address of Employer Brief Description of the Works Executed by the Tenderer	Role of Tenderer

275

Form EXP - 1: General Construction Experience

Each Tenderer or member of a JVCA must fill in this form

General Construction Experience				
Starting Month Year	**Ending Month Year**	**Years**	**Contract Identification and Name Name and Address of Employer Brief Description of the Works Executed by the Tenderer**	**Role of Tenderer**
07/2011	08/2015	4 years 1 month	**Project** →Sewage disposal system Steinfeld **Employer**→Municipality of Steinfeld, Austria **Total value of works** →4,982 mill eur **Brief Description**→Construction of the wastewater sewers, water pipes and storm sewers were replaced. In some areas the existing old sewers were rehabilitated with a pipe relining. After completition of the works all the roads were resurfaced.	Prime contractor
04/2009	05/2010	1 year 1 month	**Project** →ABA and WVA Feldstrabe (waste water treatment plant and water supply facility) **Employer**→Innsbrucker Kommunalbetriebe AG, Austria **Total value of works** →1,233 mill eur **Brief Description**→New duct laying with adaptation and construction of connection shafts as well as installation of water pipes and cable ducts	Prime contractor
11/2010	12/2011	1 year 1 month	**Project** →A23 Vienna Southeast Tangent AST road /HB 221 grade separation Ast Road BL 01- Channel relocation **Employer**→AFSINAG, Austria **Total value of works** →3,28 mill eur **Brief Description**→Construction of Arsenal channel, construction of belt channel, construction of two sliding shafts, shaft constructions.	Prime contractor

STRABAG
STRABAG AG

General Construction Experience				
Starting Month Year	**Ending Month Year**	**Years**	**Contract Identification and Name Name and Address of Employer Brief Description of the Works Executed by the Tenderer**	**Role of Tenderer**
05/2009	08/2010	1 year 3 month	**Project** →Pram Market Town, Refurbishment of Existing Sewage System (DP 2005), CS 06, BL 1 and ABA, Extension 2007, CS 07, BL 2 **Employer**→Pram Market Town Office, Austria **Total value of works** →1,7 mill eur **Brief Description**→ CS 06_ Refurbisment of the existing sewage system by new construction of the trains of pipes on the existing route or on a new route sewage inc. road construction. CS 07_ Provision of earth moving, master builder and pipe laying works inc various professional works within the scope of the 2007 extension of the Pram market town sewage disposal plant, as well as additional road construction	Prime contractor
08/2013	06/2015	1 year 10 month	**Project** →Sewage Disposal Plant Grobreichenbach-Reinbolden-Siebenlinden, OFC- Ductworks Grobreichenbach-Reinbolden-Siebenlinden Water Supply Facility Grobreichenbach **Employer**→Abwassergenossenschaft Großreichenbach Reinbolden-Siebenlinden,Austria **Total value of works** →1.233 mill eur **Brief Description**→ Sewage disposal plant included the construction of a waste water sewage system with house connections. Pump pressure line was installed with gravity sewer. Parallel to the waste water channel, an empty optic cable pipeline was laid	Prime contractor
04/2010	11/2011	1 year 7 months	**Project** →Waste water treatment plant Neulengbach BA15- Ortkanal Raipoltenbach part2 **Employer**→Municipality NEULENGBACH, Austria **Total value of works** →1.8 mill eur **Brief Description**→ Sewer line length 6850m, shafts 139pcs, pressure pipes 450m	Prime contractor
08/2008	10/2012	4 years 2 months	**Project** →Drinking water and sewerage networks in Resita town, Caras **Employer**→SC Aquacaras SA, Romania **Total value of works** →18.4 mill eur **Brief Description**→ Replace defective water distribution mains, service connections. Replace and extend defective sewers with service connections. Rehabilitate 4 existing water pumping stations, Construct one new water pumping station	Prime contractor

STRABAG
STRABAG AG

General Construction Experience				
Starting Month Year	**Ending Month Year**	**Years**	**Contract Identification and Name Name and Address of Employer Brief Description of the Works Executed by the Tenderer**	**Role of Tenderer**
10/2009	09/2010	11 months	**Project** →Construction of the sewage collectors in Zivinice **Employer**→Delegation of the European Commession to Bosnia and Hercegovina, Sarajevo **Total value of works** →1.27 mill eur **Brief Description**→ construction of new sewage collectors with connections of the existing sewage system, crossing beneath rivers	Prime contractor
09/2009	02/2011	1 year 5 months	**Project** →Rehabilitation of the wastewater disposal system in Kakanj **Employer**→WU Vodokom Kakanj, Bosnia and Hercegovina **Total value of works** →2 mill eur **Brief Description**→ construction of the PEHD sawage collectors. Pipeline from DN1200 to DN250 . Pipeline length 10km, inspection shafts 280pcs, house connections 501 pcs	Prime contractor
08/2007	07/2010	2 years 11 months	**Project** →Sewage main of Buda along the river Danube Budapest **Employer**→WU City of Budapest Municipality, Budapest **Total value of works** →35.731 mill eur **Brief Description**→ sawage main is varying between 1200-2200mm, it was built partly in open ditch partly by underground pressing forward	Prime contractor
03/2010	12/2013	3 years 10 months	**Project** →Construction and Rehabilitation of Water Supply and Wastewater Systems in the Town of Karlovac **Employer**→Central Finance and Contracting Agency (CFCA), Zagreb, Croatia **Total value of works** →16.86 mill eur	Prime contractor
11/2009	05/2011	1 year 6months	**Project** →Livno Horizon Section Zabljak – Bila–Lipa–Prolog- Rujani **Employer**→Munucipality Livno, Bosnia and Hercegovina **Total value of works** →3.5 mill eur **Brief Description**→Construction of DCI and PEHD pipeline from DN400 TO dn250 with nessesery inspection shafts. Pipeline length 32km.	Prime contractor

278

STRABAG
STRABAG AG

ЈАВНО КОМУНАЛНО ПРЕДУЗЕЋ
"ВОДОВОД"
БР. 2743
ДАТУМ: 08.09.20 17 ГОД
ЛЕСКОВАЦ

PUC Waterworks Leskovac
Pana Đukića 14
16000 Leskovac

CERTIFICATE

This is to confirm that „IWA Consalt" d.o.o. from Belgrade, successfully finalized the following design project documentation, during the period 2015-2016

Conceptual design of sanitary sewerage network for settlements in Leskovac (15 settlements + Bratmilovci)

Project for Construction Permit – Construction and upgrade of sanitary sewerage network and construction of underground pump stations (for 15 settlements, total length 74.5 km)

Project for Construction Permit – Sanitary sewerage network for settlements in Leskovac – Bratmilovce (total length 5.7 km)

JIP Leskovac
B. Stojiljković

PUC Waterworks Leskovac

279

STRABAG
STRABAG AG

Vodovod Leskovac
Pana Đukića 14
16000 Leskovac

ЈАВНО КОМУНАЛНО ПРЕДУЗЕЋЕ
"ВОДОВОД"
БР. 8743
ДАТУМ: 08.09.2017 год
ЛЕСКОВАЦ

P O T V R D A

Ovim dokumentom potvrđujemo da je 2015-2016 godine „IWA Consalt" d.o.o. iz Beograda uspešno završila projekte :

IDEJNO REŠENJE FEKALNE KANALIZACIJE U NASELJIMA U LESKOVCU (ZA 15 NASELJA + BRATMILOVCE)

PROJEKAT ZA GRAĐEVINSKU DOZVOLU - IZGRADNJA I DOGRADNJA FEKALNE KANALIZACIJE I IZGRADNJA PODZEMNIH CRPNIH STANICA (ZA 15 NASELJA, UKUPNE DUŽINE 74.5 KILOMETARA)

PROJEKAT ZA GRAĐEVINSKU DOZVOLU - FEKALNA KANALIZACIJA U NASELJIMA U LESKOVCU - BRATMILOVCE (UKUPNE DUŽINE 5.7 KILOMETARA)

JKP - Leskovac
B. Stojanović

JKP Vodovod Leskovac

Javno komunalno preduzeće Водовод Лесковац

STRABAG
STRABAG

Marktgemeinde Steinfeld
Hauptplatz 1
9754 Steinfeld

Steinfeld, den 11.09.2015

ABWASSERBESEITIGUNGEN Gemeinde Steinfeld
Referenzschreiben

Sehr geehrte Damen und Herren,

Als Auftraggeber bestätigen wir hiermit, dass das Unternehmen STRABAG AG (A-9800 Spittal/Drau, Ortenburgerstraße 27) die Bauarbeiten am Bauvorhaben „Abwasserbeseitigungsanlage Steinfeld", für die Baulose BA03.2, BA04.1 und BA05, in der Gemeinde Steinfeld, im Zeitraum vom 7/2011 bis 8/2015 durchgeführt hat.

Bauvorhaben:	Abwasserbeseitigungsanlage Steinfeld
Standort:	Gemeinde Steinfeld, A-9754 Steinfeld, Österreich
Vertragswert:	Auftragswert € 4.982.000,-- (ohne MwSt)
Funktion der STRABAG AG:	Auftragnehmer zu 100 %
Bauzeitraum:	07/2011 bis 8/2015
Vertragstyp:	offenes Verfahren - Einheitspreisvertrag
Finanzierung:	Gemeinde Steinfeld

Projektbeschreibung:

Zweck des Bauvorhabens war die Errichtung der Abwasserkanalisationsanlage in den Ortschaften Steinfeld, Gerlamoos, Gajach, Fellbach und Oberallach.

281

STRABAG
STRABAG AG

Neben der Errichtung der Schmutzwasserkanäle wurden auch die Wasserleitungen und die Regenwasserkanäle erneuert. In einigen Bereichen wurden bestehende Altkanäle mit einem Schlauchrelining saniert. Nach Fertigstellung der Arbeiten wurden sämtliche Straßen neu asphaltiert.

Technische Daten	Dimension	BA 03.2	BA 04.1	BA 05	Summe
Schmutzwasserkanal					
Kanal Nebensammler	DN 150 bis DN 200	6900 m	2800 m	5000 m	13.600 m
Kanal Hausanschlüsse	DN 150	1800 m	300 m	670 m	2.770 m
Kanal Pumpdruckleitungen	DN 63 bis DN 160	-	755 m	5250 m	6.005 m
Sonstige Leitungen					
Kanal Tragwasser	DN 400 bis DN 500	-	500 m	-	500 m
Wasserleitung	DN 50 bis DN 280	5.870 m	1.500 m	5.500 m	12.870 m
Schlauchrelining	DN 150 bis DN 500	640 m	-	-	640 m
Brückenaufhängungen	DN 200	-	-	150 m	150 m
Auftragssumme in Euro		€ 2.477.000,00	€ 860.000,00	€ 1.645.000,00	€ 4.982.000,00
Bauzeit		7/2013 - 6/2018	3/2013 - 11/2013	4/2014 - 6/2015	

Der Bürgermeister der Gemeinde Steinfeld bestätigt hiermit die äußerst zufriedenstellende Zusammenarbeit mit der Firma STRABAG AG, als auch die technische Kompetenz, fristgemäße Ausführung und vertragsgemäße Erfüllung der vertraglich vereinbarten Arbeiten im Einklang mit allen Sicherheits- und Qualitätsanforderungen.

Wir empfehlen die STRABAG AG als zuverlässigen Partner und geben hiermit unser Einverständnis für die Verwendung dieses Projektes als Referenz für die technische Leistungsfähigkeit und die Teilnahme an Ausschreibungen.

Mit freundlichen Grüßen
Ewald Tschabitscher
Bürgermeister der Gemeinde Steinfeld

STRABAG
STRABAG AG

Municipality of Steinfeld
Hauptplatz 1
9754 Steinfeld

Steinfeld, 11.09.2015

SEWAGE DISPOSAL in the municipality of Steinfeld
Letter of reference

Dear Ladies and Gentlemen,

as the Employer, we hereby confirm that the company STRABAG AG (A-9800 Spittal / Drau, Ortenburgerstr. 27) has carried out the construction works on the project "sewage disposal system Steinfeld", on the construction lots BA03.2, BA04.1 and BA05, in the municipality of Steinfeld, in the period from 7/2011 to 8/2015.

Project name:	Sewage disposal system Steinfeld
Project location:	Municipality of Steinfeld, A-9754 Steinfeld, Austria
Contract value:	Contract value € 4.982.000, -- (without VAT)
Role of STRABAG AG:	Contractor for 100 %
Construction period:	07/2011 until 8/2015
Contract type:	Open procedure – unit price contract
Financing:	Municipality of Steinfeld

Project Description:

The purpose of the project was the construction of a sewage disposal system in the municipalities of Steinfeld, Gerlamoos, Gajach, Fellbach and Oberallach.

In addition to the construction of wastewater sewers, the water pipes and storm sewers were replaced. In some areas the existing old sewers were rehabilitated with a pipe relining. After completion of the works all the roads were resurfaced.

STRABAG
STRABAG AG

Technical data	Dimension	BA 03.2	BA 04.1	BA 05	Total
Sewer					
Duct Branch Sewer	DN 150 to DN 200	6.300m	2,500m	5.000m	13.800m
Duct Service connections	DN 150	1.800m	300m	670m	2.770m
Duct Pump discharge pipes	DN 63 to DN 180	-	755m	5.250m	6.005m
Other pipes					
Duct surface water	DN 400 to DN 500	-	500m	-	500m
Water pipes	DN 50 to DN 280	5.870m	1.500m	5.500m	12.870m
Pipe relining	DN 150 to DN 500	640m	-	-	640m
Bridge suspension	DN 200	-	-	150m	150m
Contract value in EUR		€ 2.477.000,00	€ 860.000,00	€ 1.645.000,00	€ 4.982.000,00
Construction period		7/2011 – 8/2013	3/2013 – 11/2013	4/2014 – 8/2015	

The mayor of the municipality of Steinfeld hereby confirms the extremely satisfactory cooperation with the company STRABAG AG, as well as the technical expertise, timely execution and contractual fulfillment of the contracted works in accordance with all safety and quality requirements.

We recommend STRABAG AG as a reliable partner and hereby give our consent for the use of this project as a reference for the technical performance and the participation in tendering procedures.

Best regards
Ewald Tschabitscher
Mayor of the Municipality of Steinfeld

[Signature]

[Stamp: Municipality Steinfe'...

STRABAG
STRABAG AG

IKB | Wasser Abwasser

REFERENZSCHREIBEN

Sehr geehrte Damen und Herren,

Innsbruck, am 22.10.2010

gerne bestätigen wir als Auftraggeber, dass die Firma STRABAG AG mit eingetragenem Sitz in der Ortenburgerstraße 27, 9800 Spittal/Drau, Österreich, für das Projekt **«ABA und WVA Feldstraße»** in Innsbruck/Tirol, von uns beauftragt wurde.

Gesamtauftragssumme:	EUR 1,233 Mio.
Ausführungszeitraum:	14/04/2009 – 28/05/2010
Datum Auftragserteilung:	23 / 04 / 2009
Datum Übergabe/Abnahme:	21 / 07 / 2010
Auftragsanteil in %:	100%

Projektbeschreibung:

Gegenstand des Bauauftrages war die Neuverlegung eines Kanals mit Adaptierung und Neubau der Anschlussschächte, sowie das Mitlegen einer Wasserleitung und Kabelleerrohren.

Projektdaten:

Kanal:		
Material:	Stahlbeton (schalungserhärtet)	
Dimension:	Ei-Profil 800/1200	350m
	Ei-Profil 1000/1500	410m
Wasserleitung:		
Material:	PE	
Dimension:	DN 225	
Konventionell:	560m	
Berstlining:	200m	
Kabelleerrohre:		
Material:	PE-HD	
Dimension:	DN 110	4x 750m
	DN 160	2x 750m

Als Auftraggeber kann die Innsbrucker Kommunalbetriebe AG der Firma STRABAG AG eine äußerst zufriedenstellende Zusammenarbeit sowie eine fachgerechte, pünktliche, vertrags- und gesetzeskonforme Ausführung der beauftragten Arbeiten unter Einhaltung aller Qualitäts- und Sicherheitsanforderungen bestätigen und die STRABAG AG als einen zuverlässigen Partner für weitere Projekte empfehlen.

Wir geben hiermit auch die Zustimmung zur Veröffentlichung dieses Projektes zum Zweck der Präqualifikation u.ä.

Mit freundlichen Grüßen

Innsbrucker Kommunalbetriebe AG
Wasser Kanal Planung
A-6020 Innsbruck, Raßlaugasse 2
Ing. Arno Happacher
E-Mail: a.happacher@ikb.at
Tel.: 0512 / 502 - 7434
Fax: 0512 / 502 - 7434

DRUŠTVO VODOVOD I KANALIZACIJA DANILOVGRAD VIK

STRABAG
STRABAG AG

IKB | Wasser und Abwasser

LETTER OF REFERENCE

Dear Sir or Madam,

Innsbruck, 22.10.2010

In the capacity of Employer we are pleased to confirm that we hired the company STRABAG AG with registered office at Ortenburgerstraße 27, 9800 Spittal/Drau, Austria for the execution of the works under the Project <<ABA and WVA Freldstraße (Waste Water Treatment Plant and Water Supply Facility>> in Innsbruck/Tirol.

Total contract value:	EUR 1,233 Mil.
Construction period:	14/04/2009 – 28/05/2010
Contract award date:	23/04/2009
Handover/acceptance date:	21/07/2010
Contract share in %:	100 %

Project description:
The subject matter of the construction contract was new duct laying with adaptation and construction of connection shafts as well as installation of water pipes and cable ducts.

Project data:

Channel

Material:	reinforced concrete (hardened in formwork)	
Dimensions:	egg-shaped profile 800/1200	350 m
	egg-shaped profile 1000/1500	410 m

Water pipeline

Material:	PE	
Dimension:	DN 225	
Conventional:	560 m	
Berstlining:	200 m	

Cable conduits

Material:	PE-HD	
Dimension:	DN 110	4x 750 m
	DN 160	2x 750 m

In the capacity of Employer, Innsbrucker Kommunalbetriebe AG confirms hereby to have a highly satisfactory cooperation with STRABAG AG as well as that Strabag AG executed the commissioned works in a professional and timely manner in accordance with the contract and the legal regulations and in compliance with all quality and safety requirements, and it recommends STRABAG AG as a reliable partner for further projects.

We hereby also give the consent to the publication of this project for the purpose of pre-qualification etc.

Yours sincerely,
Ing. Arno Happacher, signed
Email: a.happacher@ikb.at
Tel: 0512/502-7434
Fax: 0512/502-7434

Affixed stamp

286

STRABAG
STRABAG AG

ABA AND WVA FELDSTRASSE
Innsbruck / Tirol

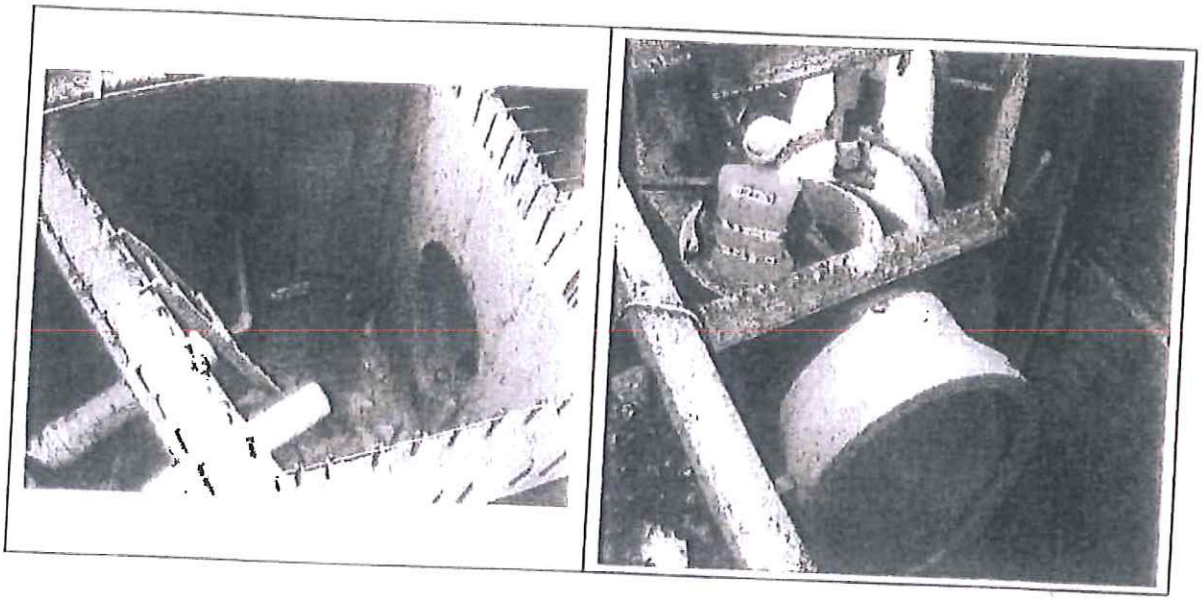

Employer:
Innsbrucker Kommunalbetriebe AG

Total contract value:
EUR 1,233 Mio.

Contract share in %:
100%

Construction period:
04/2009 – 05/2010 (14 Month)

Project description:

The subject matter of the construction contract was new duct laying with adaptation and construction of connection shafts as well as installation of water pipes and cable ducts.

Project data:

CHANNEL:

Material:	reinforced concrete (hardened in formwork)	
Dimensions:	egg-shaped profile 800/1200	350m
	egg-shaped profil 1000/1500	410m

WATER PIPELINE:

Material:	PE	
Dimension:	DN 225	
Conventional:		560m
Berstlining:		200m

Cable conduits:

Material:	PE-HD	
Dimension:	DN 110	4x 750m
	DN 160	2x 750m

www.strabag.com

S.C. AQUACARAS S.A.
INTRARE NR. ...
IEŞIRE NR. ...
ANUL 20.. LUNA ... ZIUA ...

AQUACARAŞ S.A.
APA ESTE VIAŢĂ

letter of reference

Resita, 11th July, 2013

Dear Sir or Madam, (To whom it may concern)

As the client we herewith confirm that the company STRABAG AG (A-9800 Spittal Drau, Ortenburgerstraße 27) performed the construction works for the project described below in accordance with the contractual provisions.

Project name:	Drinking Water and Sewerage Networks in Resita Town, Caras Severin County
Place of project:	Resita, Romania
Contract value:	18,4 million EUR (total) – share of STRABAG AG: 3,7 million EUR
Role of STRABAG AG:	Joint Venture partner (20 %)
Construction period:	08/2013 to 10/2012
Date of Technical Handover:	18/10/2012
Date of award:	04 / 08 / 2008
Contract type:	Red FIDIC
Financial source:	partially from EU sources
Project manager:	SARGHE MARIUS
Site manager:	TIMPAU CONSTANTIN

Project Description:

Primary purpose of the works

- Replace defective water distribution mains, service connections and associated ancillaries
- Extend networks with service connections and associated ancillaries
- Install customer and bulk flow meters
- Replace and extend defective sewers with service connections and associated ancillaries
- Rehabilitate 4 existing water pumping stations (Civil, M & E)
- Construct one new water pumping station (Civil, M & E)
- Provide SCADA monitoring

320026 REŞIŢA P-ţa Republicii nr. 7
jud. Caraş-Severin / ROMÂNIA
Telefon: 0040-255-212458
Fax: 0040-255-214421
E-mail: office@aquacaras.ro
Website: www.aquacaras.ro

ISO 9001 OHSAS 18001 ISO 14001

Nr. înregistrare: J11/831/2004
Cod fiscal: RO 16868757
Cont BCR: RO89RNCB0100022409840001
Cont RF: RO03RZBR0000060005341714
Cont Trez: RO24TREZ1815069XXX001453
Capital subscris ...

STRABAG
STRABAG AG

AQUACARAŞ S.A.
APA ESTE VIAŢĂ!

Technical Project Data:

Water distribution (PE)	48,625 km rehabilitation
Water distribution (PE)	5,995 km extension
Water distribution	256 Hydrants
Water distribution	3519 House connections
Sewer distribution (PE)	29,334 km rehabilitation
Sewer distribution (PE)	3,369 km extension

SC AQUACARAS SA confirms the extremely satisfactory collaboration with the company STRABAG AG as well as technically competent, punctual and contractually compliant performance of the contracted works in compliance with all the safety and quality requirements.

We recommend STRABAG AG as a reliable partner and herewith consent to the use of this project as a reference for technical performance in prequalification, etc.

Best regards

Dan Petrescu
Executive Director

320026 REŞIŢA P-ţa Republicii nr. 7
jud. Caraş-Severin / ROMÂNIA
Telefon: 0040-255-212458
Fax: 0040-255-214421
E-mail: office@aquacaras.ro
Website: www.aquacaras.ro

Nr. înregistrare: J11/631/2004
Cod fiscal: RO 16868757
Cont BCR: RO89RNCB0100022409840001
Cont RF: RO03RZBR0000060006341714
Cont Trez: RO24TREZ1815069XXX001453
Capital subscris si [illegible]

STRABAG
STRABAG AG

S.C. AQUACARAS S.A.
INTRARE NR. 8329
IESIRE NR. .....
ANUL 2013 LUNA 08 ZIUA 30

FORM

ii. Details of Contracts of Similar Nature and Complexity

	Contract		
	Contract name: Drinking Water and Sewerage Networks in Resita Town, Contract number: ISPA2005/RO16//P/PE/003/05	Country: Romania Contract value (Euro): 18.4 Mio	
	Contracting Authority		
	Name: SC AQUACARAS SA Address: Republicii Square, No 7, Resita, Caras Severin, Romania	Phone: +40 255 212 458 Fax: +40 255 214 421	
	Supervising Engineer		
	Name: Louis Berger SAS Address: Project address: Aquacaras	Phone: +40 255 214420 Fax: +40 255 212 093	
	Role of the Tenderer/Partner of a Joint Venture / Subcontractor (check one):		
	☐ Sole Contractor	☐ Subcontractor for .... % of the Contract value	
	☐ Management contractor	X Partner in a joint Venture with 20 % of the contract value	
	☐ Designer		
	Value of the total contract/subcontract/partner share (in Euro equivalent at completion, or at date of award for current contracts).	Euro 3.7 Mio	
	Nature of works carried out by the Tenderer/ partner of a joint venture/subcontractor and special features relevant to this contract:		
	Water distribution (PE) 48,625 km rehabilitation Water distribution (PE) 5,995 km extension Water distribution 256 Hydrants Water distribution 3519 House connections Sewer distribution (PE) 29,334 km rehabilitation Sewer distribution (PE) 3,369 km extension		
	Date of award: 08/2008	Date of Completion: 10/2012	
	Contract/subcontract duration as per original contract (years and months)	3 years and 2 months	
	Replace defective water distribution mains, service connections and associated ancillaries Extend networks with service connections and associated ancillaries Install customer and bulk flow meters Replace and extend defective sewers with service connections and associated ancillaries Rehabilitate 4 existing water pumping stations (Civil, M & E) Construct one new water pumping station (Civil, M & E) Provide SCADA monitoring		
	For sole/prime contractors, indicate the approximate Euro amount and nature of substantial work (more than 10% in contract value) undertaken by subcontractors, if any.		

The Tenderer should insert any specific contractual criteria required for particular operations, such as annual volume of earthmoving, underground excavation, or placing concrete.

Signed and sealed by representative of the Contracting Authority or its Supervising Engineer

Name:	Petrescu Dan	Phone:	0040-255212458
Address:	P-ta Republicii nr. 7	Fax:	0040-255214421
Position:	Executive Director		
Signature:		Date:	28.08.2013

STRABAG
STRABAG AG

AQUACARAŞ S.A.
APA ESTE VIAŢĂ!

S.C. AQUACARAŞ S.A.
INTRARE NR. R 1104
IEŞIRE NR.
ANUL 20 LUNA 03 ZIUA

Letter of Reference

Dear Sir or Madam, (To whom it may concern)

As the client we herewith confirm that the company STRABAG AG performed the construction works for the project described below in accordance with the contractual provisions.

Project name:	Drinking Water Treatment Plant and Pumping Stations in Resita
Place of project:	Resita, Romania
Contract value:	EUR 16.3 million – share of STRABAG AG: 100%
Role of STRABAG AG:	Main Contractor
Construction period:	10/2008 to 10/2011
Contract type:	FIDIC Yellow Book
Financial source:	ISPA/ Governmental founds

Project Description:

- Working Contract 2 – Rehabilitation of Drinking Water Treatment Plant and Pumping Station in Resita
- the works include the following process stages:
  - Pre oxidation with Chlorine Dioxide
  - Powdered Activated Carbon Injection
  - Coagulation
  - Clarification
  - Remineralisation (carbonatisation)
  - Sand filtration
  - Disinfection with Chlorine Dioxide (1st in Romania)
  - Sludge treatment
- The works need to be executed during uninterrupted operation of the existing treatment plant, switch over after completion / commissioning of works without delay.

Technical Project Data:

• Treated water production	630 l/s
• Number of pumping stations	2 each 630 l/s
• Reservoirs	5000m3
• Excavation (for buildings)	25.000m3
• Reinforced Concrete	4000m3
• Pipeworks (DN500 to DN1000)	500m (in depth deeper 5m in confined area of 2500m2)
• Pipeworks shallow (< DN500)	3000m in same area
• Roads:	2500m2

We also herby certify that the company STRABAG AG and AQUACARAS s.a. has operated together for a period of 2 years the treatment plant.

291

320026 REŞIŢA P-ţa Republicii nr. 7
jud. Caraş-Severin / ROMÂNIA
Telefon: 0040-255-212458
Fax: 0040-255-214421
E-mail: office@aquacaras.ro
Website: www.aquacaras.ro

STRABAG
Ng înregistrare: J/40/31/2004G
Cod fiscal: RO 16868757
Cont BCR: RO89RNCB0100022409840001
Cont RF: RO03RZBR0000060006341714
Cont Trez: RO24TREZ1815069XXX001453
Capital subscris și vărsat: 2 570 749

AQUACARAŞ S.A.
APA ESTE VIAŢĂ

Value of the Operation costs for the entire period: 1,4 Mio €

AQUACARAS SA confirms the extremely satisfactory collaboration with the company STRABAG AG as well as technically competent, punctual and contractually compliant performance of the contracted works in compliance with all the safety and quality requirements.

We recommend STRABAG AG as a reliable partner and herewith consent to the use of this project as a reference for technical performance in prequalification, etc.

Best regards

EXECUTIVE DIRECTOR
DAN PETRESCU

SOCIETATEA COMERCIALĂ C.U.I. AQUACARAS S.A. REŞIŢA-ROMÂNIA

320026 REŞIŢA P-ţa Republicii nr. 7
jud. Caraş-Severin / ROMÂNIA
Telefon: 0040-255-212458
Fax: 0040-255-214421
E-mail: office@aquacaras.ro
Website: www.aquacaras.ro

STRABAG
STRABAG AG
Nr. înregistrare: J11/831/2004
Cod fiscal: RO 16868767
Cont BCR: RO89RNCB0100022409840001
Cont RF: RO03RZBR0000060003341714
Cont Trez: RO24TREZ1815069XXX001453
Capital subscris şi vărsat: 2.570.740

TAKING-OVER CERTIFICATE (TOC) / Certifikat o preuzimanju radova (TOC)		Date/ Datum:	09.06.2014.
Employer: *Naručitelj:*	Central Finance and Contracting Agency (CFCA); Ulica grada Vukovara 284/ III, 10 000 Zagreb	Contract Number: *Ugovor br.:*	ISPA 2005/HR/16/P/PE/001-010201
Contractor: *Izvođač:*	STRABAG AG; Donau-City-Strasse 9, 1220 Vienna, Austria		
Engineer: FIDIC Inženjer:	Investinženjering d.o.o, Tuškanova 41, 10 000 Zagreb		
Final Beneficiary: Krajnji korisnik	Vodovod i kanalizacija d.o.o Karlovac, Gažanski trg 8, 47 000 Karlovac		

The Employer is to take-over the Works on the basis that the Contractor has completed the Works as per the Contract and issues therein of this Taking-Over Certificate. *Naručitelj preuzima radove nakon što ih je Izvođač dovršio sukladno Ugovoru te izdaje ovaj Certifikat o preuzimanju radova.*

Group of Works / Grupa radova	Group 1 to 6 / Grupa 1 do 6	Part of the Works: /Dijelovi ugovorenih radova	as defined in attached table 1 which is constituent part of the TOC / sukl[illegible]no priloženoj tablici 1 koja je sastavni dio TOC-a

Section A: / *Dio A:*

Related Drawings: *Nacrti:* *(Refer to seperate sheet if necessary) (Pozvati se na dodatne stranice ukoliko je potrebno)*	Refer to document in attachment Pozvati se na priloženu dokumentaciju Related drawings (as-built documentation) are as defined in separate Tests on Competion Records / Priloženi nacrti (as-built dokumentacija) kako je definirano pojedinačnim Zapisnicima o provedenim završnim ispitivanjima
Related Documents: Dokumentacija: *(Refer to seperate sheet if necessary) (Pozvati se na dodatne stranice ukoliko je potrebno)*	Refer to document in attachment Pozvati se na priloženu dokumentaciju 1.0 Brakedown of the Group of Works in accordance with the Contract with defined separate taking over dates (Table 1) 1.0 Popis ugovorenih radova razvrstan po grupama radova u skladu sa Ugovorom sa pojedinačno definiranim datumima ugovorne primopredaje (Tablica 1) 2.0 Tests on Completion Records (ToC) with defined defects 2.0 Zapisnik o provedenim završnim ispitivanjima sa utvrđenim nedostatcima 3.0 Issued Completion Certificates by previous Engineer (SAFEGE) 3.0 Izdani Zapisnici o završetku radova po prethodnom FIDIC Inženjeru (SAFEGE)

[v] **(i) Taking-Over-Certificate is issued pursuant to sub-clause 10.1 of the Contract. All works were completed in accordance with the Contract on 28 March 2014. Parts of the Works are deemed to be taken over pursuant to sub-clause 10.2 of the Contract as a consequence of their use by the Employer, as indicated in the attached Table 1.**

(i)Certifikat o preuzimanju radova izdaje se u skladu sa klauzulom 10.1. Ugovora. Svi radovi završeni su u skladu s Ugovorom na dan 28. ožujka 2014. Dijelovi ugovorenih radova smatraju se preuzetim prema klauzuli 10.2 Ugovora zbog njihova korištenja od strane Naručitelja, kako je navedeno u priloženoj tablici br. 1

[v] **(ii) The contractor will be responsible for the installed equipment failure until the issuance of the "PERFORMANCE CERTIFICATE" and will maintain (provide full preventive Maintenance) and repair the installed equipment / plant prior the issuance of the "PERFORMANCE CERTIFICATE"**

(ii) Izvođač je odgovoran za nedostatke ugrađene opreme i izvedenih postrojenja do izdavanja "CERTIFIKATA O KONAČNOM PREUZIMANJU" te će održavati (osigurati preventivno održavanje) i popravljati opremu / postrojenje do izdavanja "CERTIFIKATA O KONAČNOM PREUZIMANJU"

Remarks: *Napomene.*	1.0 The Employer is taking-over the works on the basis of Completion of physical works and all necessary transfer of documentation from the Contractor to Employer as determined in the Contract *1.0 Naručitelj preuzima radove nakon fizičkog dovršenja radova i dostave sve potrebne dokumentacije od Izvođača kako je određeno Ugovorom.* 2.0 The Employer is Taking -Over the areas and works as determined in drawings and schedules *2.0 Naručitelj preuzima dijelove i radove kako je određeno u nacrtima i planovima.*

Section B:/ *Dio B:*

These pre-requisites for the Takeover, to be fulfilled until: *Preduvjeti za Preuzimanje i rok:* *were as follows:* *su kuko slijedi*

Item Number *Stavka br.*	Issue *Problematika*	Responsible Party *Odgovorna strana*	Employer's Acceptanc *Suglasnost Naručitelja* Date *Datum*	YES *DA*	Comment *Komentar*	NO *NE*
N/A	none	N/A	N/A	N/A	N/A	N/A

Engineer /FIDIC *Inženjer*:

Name/*Ime*: Mirko Oreškovič

Signature/*Potpis*:

STRABAG AG

POJEDINAČNI DATUMI ZAVRŠETAKA RADOVA PO DIONICAMA- DIJELOVIMA UGOVORNIH RADOVA /INDIVIDUAL COMPLETION DATES BY SECTION- PART OF THE WORKS

Tablica 1. / Table 1.

Br. / No.	Ugovorna Grupa radova / Dionica *Contract Group of Works/Sections*	Građ.dozvola /Potvrda na gl.projekt *Construction Permit*	Dijelovi radovi su preuzeti datumom korištenja od strane Naručitelja (čl.10.2)/Datum *Part of the Works are taken over on a date when Employer starts to use the part of works (GC 10.2)*	Prijašnji FIDIC Inženjer je potvrdio završetak dijela radova izdavanjem zasebnog dokumenta (Completion Certificate) Previous Engineer confirmed completion of the part of works by issuing the Completion Certificate	Odluka FIDIC Inženjera-datum završetka radova / Completion dates- Engineer assessment	Datum završetka perioda za otklanjanje nedostataka / Defects notification period finish date
	Group 1					
1.1.	Grad Main Lift Station	CRPNA STANICA GRAD KLASA:361-03/08-08/68 URBROJ:2133/01-03-03/37-08-5 16.09.2008.	**DA /YES**	**DA (06.10.2011.) / YES October 6th 2011.**	**6.10.2011**	**6.10.2012**
1.2.	Main Grad Collector (section 3) including holing-trough beneath the Korana River	GLAVNI KOLEKTOR GRAD KLASA:361-03/08-08/70 URBROJ:2133/01-03-03/36-08-10 12.09.2008.	**DA (27.09.2011. održan je tehnički pregled) / YES (on September 27th 2011. technical inspection was held)**	**NE / NO**	**27.9.2011**	**27.9.2012**
1.3.	Connection of the South Main Collector to the WWTP	SPOJ KOLEKTORA DUGA RESA-KARLOVAC NA CENTRALNI UREĐAJ KLASA:361-03/10-08/11 URBROJ:2133/01-05-01/18-10-07 18.05.2010.	**DA (13.05.2011. održan je tehnički pregled) / YES (on May 13th 2011 technical inspection was held)**	**NE / NO**	**13.5.2011**	**13.5.2012**
	Group 2					
2.1.	Gaza Stormwater Pumping Station	CRPNA STANICA GAZA ISPUST GAZA 1 KLASA:361-03/08-08/79 URBROJ:2133/01-03-03/34-08-22 16.09.2008	**NE / NO**	**NE / NO**	**19.3.2014**	**19.3.2015**
2.2.	Stormwater Discharge Gaza (section 4)-holing trough	u dozvoli Kolektor Banija Gaza (dionice 1a,1b,4,7,7a) / *included in Construction Permit Banija- Gaza (section 1a,1b,4,7,7a)*	**NE / NO**	**DA (19.03.2012.) /YES (March 19th 2012.)**	**19.3.2012**	**19.3.2013**

294

STRABAG STRABAG AG

Br. / No.	Ugovorna Grupa radova / Dionica *Contract Group of Works/Sections*	Grad.dozvola /Potvrda na gl.projekt *Construction Permit*	Dijelovi radovi su preuzeti datumom korištenja od strane Naručitelja (čl.10.2)/Datum *Part of the Works are taken over on a date when Employer starts to use the part of works (GC 10.2)*	Prijašnji FIDIC Inženjer je potvrdio završetak dijela radova izdavanjem zasebnog dokumenta (Completion Certificate) Previous Engineer confirmed completion of the part of works by issuing the Completion Certificate	Odluka FIDIC Inženjera-datum završetka radova / Completion dates-Engineer assessment	Datum završetka perioda za otklanjanje nedostataka / Defects notification period finish date
2.3.	Reconstruction of the existing main discharge collector for use as Stormwater Retention Volume (section 16)	Naručitelj nije u zakonskoj obvezi ishođenja dozvole za predmetne radove. *Employer is not in legal obligation to issue construction permit for subject works*	NE / NO	NE / NO	23.8.2012	23.8.2013
2.4.	Demolition of the building of the old PS Sanac (Gaza)	DOZVOLA ZA UKLANJANJE CRPNA STANICA GAZA KLASA:UP/I-360-02/08-01/6 URBROJ:2133/01-03-03/36-08-3 08.09.2008.	NE / NO	NE / NO	17.10.2012	17.10.2013
2.5.	Draining PS Struga for rest water from the stormwater retention pipe (section 16)	CRPNA STANICA STRUGA KLASA:361-03/08-08/77 URBROJ:2133/01-03-03/34-08-18 17.09.2008.	NE / NO	NE / NO	18.3.2014	18.3.2015
2.6.	Pressure Pipe Ulica Gornja Gaza (section 15)	TLACNI CJEVOVOD GORNJA GAZA KLASA:361-03/08-08/81 URBROJ:2133/01-03-03/31-08-14 12.09.2008	NE / NO	NE / NO	25.3.2014	25.3.2015
	Group 3					
3.1.	Pumping Station Banija 2	CRPNA STANICA I RETENCIJSKI BAZEN BANIJA 2 KLASA:361-03/08-08/65 URBROJ:2133/01-03-03/39-08-35 17.09.2008.	NE / NO	NE / NO	13.3.2014	13.3.2015
3.2.	Collector Banija-Gaza (section 1a), including holing-through beneath the Kupa River	KOLEKTOR BANIJA-GAZA KLASA:361-03/08-08/68 URBROJ:2133/01-03-03/36-08-10 17.09.2008	NE / NO	NE / NO	28.3.2014	28.3.2015
3.3.	Collector Gaza (Section 7 and 7a)					
3.4.	Holing-through of the collectors 1a and 7 beneath the building of the Fire Brigade					

STRABAG STRABAG AG

Br. / No.	Ugovorna Grupa radova / Dionica *Contract Group of Works/Sections*	Građ.dozvola /Potvrda na gl.projekt *Construction Permit*	Dijelovi radovi su preuzeti datumom korištenja od strane Naručitelja (Č.10.2)/Datum *Part of the Works are taken over on a date when Employer starts to use the part of works (GC 10.2)*	Prijašnji FIDIC Inženjer je potvrdio završetak dijela radova izdavanjem zasebnog dokumenta (Completion Certificate) Previous Engineer confirmed completion of the part of works by issuing the Completion Certificate	Odluka FIDIC Inženjera-datum završetka radova / Completion dates-Engineer assessment	Datum završetka perioda za tklanjanje nedostataka / Defects notification period finish date
3.5.	Pumping Station Drežnik	CRPNA STANICA DREŽNIK, RETENCIJSKI BAZEN DREŽNIK, ISPUST DREŽNIK I KOLEKTOR DREŽNIK KLASA:361-03/08-08/67 URBROJ:2133/01-03-03/37-08-5 16.09.2008	DA/ YES	NE / NO	26.3.2012	26.3.2013
3.6.	Main Collector Drežnik (section 11), including holing.trough beneath the Kupa River		NE / NO	NE / NO	17.7.2012	17.7.2013
	Group 4					
4.1.	Pumping Station Banija 1	CRPNA STANICA BANIJA 1 KLASA:361-03/08-08/66 URBROJ:2133/01-03-03/39-08-35 11.09.2008.	NE / NO	NE / NO	13.3.2014	13.3.2015
4.2.	Collector Banija (section 1b)	u dozvoli Kolektor Banija Gaza (dionice 1a,1b,4,7,7a)/ *included in Construction Permit Banija- Gaza (section 1a,1b,4,7,7a)*	NE / NO	NE / NO	28.3.2014	28.3.2015
4.3.	Collector PPK (Section 6)	KOLEKTOR PPK KLASA:361-03/08-08/71 URBROJ:2133/01-03-03/37-08-5 12.09.2008.	DA (28.08.2012. održan je tehnički pregled) / YES (on August 28th 2012. technical inspection was held)	NE / NO	28.8.2012	28.8.2013
4.4.	Rehabilitation of existing Network (section13)	Naručitelj nije u zakonskoj obvezi ishođenja dozvole za predmetne radove. *Employer is not in legal obligation to issue construction permit for subject works.*	NE / NO	NE / NO	25.3.2014	25.3.2015
	Group 5					
5.1.	Pumping Station Mostanje	CRPNA STANICA MOSTANJE KLASA:361-03/08-08/78 URBROJ:2133/01-03-03/34-08-17 12.09.2008.	DA (18.05.2012.) / YES (May 18th 2012.)	NE / NO	18.5.2012	18.5.2013

STRABAG STRABAG AG

Br. / No.	Ugovorna Grupa radova / Dionica: Contract Group of Works/Sections	Građ.dozvola /Potvrda na gl.projekt Construction Permit	Dijelovi radovi su preuzeti datumom korištenja od strane Naručitelja (Č.10.2)/Datum Part of the Works are taken over on a date when Employer starts to use the part of works (GC 10.2)	Prijašnji FIDIC Inženjer je potvrdio završetak dijela radova izdavanjem zasebnog dokumenta (Completion Certificate) Previous Engineer confirmed completion of the part of works by issuing the Completion Certificate	Odluka FIDIC Inženjera-datum završetka radova / Completion dates-Engineer assessment	Datum završetka perioda za otklanjanje nedostataka / Defects notification period finish date
5.2.	Collector and Sewer Lines Švarča (sections 2c; 2b; 2a-2) including holing-trough beneath the Korana River	KOLEKTOR MOSTANJE-ŠVARČA I JUŽNI KOLEKTORI KLASA:361-03/08-08/80 URBROJ:2133/01-03-03/31-08-16 17.09.2008.	DA (18.05.2012.) / YES (May 18th 2012.)	NE / NO	18.5.2012	18.5.2013
5.3.	Pumping Station Švarča 1	CRPNA STANICA I RETENCIJSKI BAZEN ŠVARČA 1 KLASA:361-03/08-08/69 URBROJ:2133/01-03-03/36-08-10 17.09.2008.	DA (18.05.2012.) / YES (May 18th 2012.)	NE / NO	18.5.2012	18.5.2013
5.4.	Sewer Mala Švarča (section 8)		NE / NO	NE / NO	18.5.2012	18.5.2013
	Group 6					
6.1.	Replacement of 9.5 km of pipes which are in worst condition	VODOOPSKRBNI CJEVOVOD GORNJA JELSA-BRODARCI-TUŠKANI KLASA:UP/I-361-03/08-04/33 URBROJ:2133/01-03-03/34-08-19 15.07.2008.	NE / NO	DA (27.03.2012.)/ YES (March 27th 2012.)	27.3.2012	27.3.2013
6.2.	Refurbishment and cleaning of the existing water wells at Mekušje and at Borlin	Naručitelj nije u zakonskoj obvezi ishođenja dozvole za predmetne radove. *Employer is not in legal obligation to issue construction permit for subject works*	NE / NO	DA (03.02.2012.) / YES (February 3rd 2012.)	3.2.2012	3.2.2013
6.3.	Refurbishment of the Borlin reservoir	Naručitelj nije u zakonskoj obvezi ishođenja dozvole za predmetne radove. *Employer is not in legal obligation to issue construction permit for subject works.*	NE / NO	NE / NO	27.3.2014	27.3.2015

Br. / No.	Ugovorna Grupa radova / Dionica *Contract Group of Works/Sections*	Građ.dozvola /Potvrda na gl.projekt *Construction Permit*	Dijelovi radovi su preuzeti datumom korištenja od strane Naručitelja (čl.10.2)/Datum *Part of the Works are taken over on a date when Employer starts to use the part of works (GC 10.2)*	Prijašnji FIDIC Inženjer je potvrdio završetak dijela radova izdavanjem zasebnog dokumenta (Completion Certificate) Previous Engineer confirmed completion of the part of works by issuing the Completion Certificate	Odluka FIDIC Inženjera-datum završetka radova / Completion dates-Engineer assessment	Datum završetka perioda za tklanjanje nedostataka / Defects notification period finish date
7.1.	SCADA	Izvođač je izveo radove, odnosno završio sve ugovorom predviđene radove SCADA sustava u skladu sa Ugovorom i kroz glavne projekte i postojeće građevinske dozvole za kolektore i crpne stanice. *Contractor executed works i.e. Completed all contract works of the SCADA system in accordance with the Contract and trough Main designs and existing construction permits for collectors and pump stations.*	NE / NO	NE / NO	19.03.2014.	19.03.2015.
7.2.	Rain Overflow Zvijezda	Naručitelj nije u zakonskoj obvezi ishođenja dozvole za predmetne radove. *Employer is not in legal obligation to issue construction permit for subject works.*	NE / NO	NE / NO	27.3.2014	27.3.2015
7.3.	Rain Overflow Matice Hrvatske	Naručitelj nije u zakonskoj obvezi ishođenja dozvole za predmetne radove. *Employer is not in legal obligation to issue construction permit for subject works.*	NE / NO	NE / NO	27.3.2014	27.3.2015

598

STRABAG STRABAG AG

Form EXP - 2: Specific Construction Experience

Fill up one (1) form per Contract

Contract of Similar Size and Nature			
Contract No 1 of 3	**Contract Identification**	**Sewage disposal system Steinfeld**	
Award Date	7/2011	**Completion Date**	8/2015
Role in Contract	**Contractor** X	**Management Contractor**	**Subcontractor**
Total Contract Amount	**4.982 mill EURO**		
If partner in a JVCA or subcontractor, specify participation of total contract amount	**Percent of Total** NOT APPLICABLE	**Amount** NOT APPLICABLE	
Employer's Name **Address** **Telephone/Fax Number** **E-mail**	**Municipality of Steinfeld, Austria** **Hauplatz, 9754**		
Description of the similarity in accordance with criteria due to Table 2.4., Clause 2.4.2 of Tenderers Qualifications			
Construction of the wastewater sewers, water pipes and storm sewers were replaced. In some areas the existing old sewers were rehabilitated with a pipe relining. After completition of the works all the roads were resurfaced.			
MAIN QUANTITIES: SEWER Duct brunch sewer 13.80 km Duct Service conections: 2.77 km Duct pump discharge pipes 6.00 km			

STRABAG
STRABAG AG

Form EXP - 2: Specific Construction Experience

Fill up one (1) form per Contract

Contract of Similar Size and Nature			
Contract No 2 of 3	**Contract Identification**	**Drinking water and sewerage networks in Resita town, Caras**	
Award Date	04/8/2008	**Completion Date**	10/2012
Role in Contract	**Contractor** **X**	**Management Contractor**	**Subcontractor**
Total Contract Amount	**18.4 mill EURO**		
If partner in a JVCA or subcontractor, specify participation of total contract amount	**Percent of Total** **20%**	Amount **3.7mill EURO**	
Employer's Name **Address** **Telephone/Fax Number** **E-mail**	**SC Aquacaras SA, Romania** **P ta Republici nr.7** **0040-255-212458** **office@aquacaras.ro**		
Description of the similarity in accordance with criteria due to Table 2.4., Clause 2.4.2 of Tenderers Qualifications			
Replace defective water distribution mains, service connections and associated ancillaries. Extended networks with service connections and associated ancillaries. Replace and extend defective sewers with service connections and associated ancillaries, rehabilitate 4 existing water pumping stations, construct one new water pumping station			
MAIN QUANTITIES: SEWER Sewer distribution Sewer distribution Water distribution Water distribution Water distribution	 29.334 km rehabilitation 3.369 km extension 48.625 km rehabilitation 5.995 km extension 3519 house connections		

D.O.O. "VODOVODI I KANALIZACIJA" DANILOVGRAD

STRABAG
STRABAG AG

Form EXP - 2: Specific Construction Experience

Fill up one (1) form per Contract

Contract of Similar Size and Nature			
Contract No 3 of 3	**Contract Identification**	**Construction and Rehabilitation of Water Supply and Wastewater Systems in the Town of Karlovac**	
Award Date	03/2010	**Completion Date**	12/2013
Role in Contract	**Contractor** **X**	**Management Contractor**	**Subcontractor**
Total Contract Amount	**16.86 mill EURO**		
If partner in a JVCA or subcontractor, specify participation of total contract amount	**Percent of Total** NOT APPLICABLE	Amount NOT APPLICABLE	
Employer's Name **Address** **Telephone/Fax Number** **E-mail**	Central Finance and Contracting Agency (CFCA), Zagreb, Croatia		
Description of the similarity in accordance with criteria due to Table 2.4., Clause 2.4.2 of Tenderers Qualifications			
Grad main lift station , Main Grad Collector including holing trough beneath Korana River, Connection of the South Main Collector to the WWTP, Stormwater pumping station, Reconstruction of the existing main discharge collector for use as Stormwater Retention Volume, Rehabilitation of existing network, Replacement of 9.5km of pipes which are in worst condition			

301

STRABAG
STRABAG AG

2. QUALIFICATION SUMMARY

Factor	Table 2.1 Eligibility					
Sub-Factor	Criteria					Documentation Required
	Requirement	Tenderer				
		Single Entity	Joint Venture, Consortium or Association			
			All partners combined	Each partner	At least one partner	
2.1.1 Government Owned Entity	*Compliance with conditions of ITT, Clause 3.*	*Must meet requirement*	*Must meet requirement*	*Must meet requirement*	*N/A*	*Form ELI - 1 and 2 with attachments*
2.1.2 Bank Ineligibility	*Not having been declared ineligible by the Bank as described in ITT 2.1.*	*Must meet requirement*	*JVCA must meet requirement*	*Must meet requirement*	*N/A*	*Application Submission Sheet & Letter of Tender*
2.1.3 Ineligibility based on a United Nations resolution or Borrower's country law	*Not having been excluded as a result of the Borrower's country Laws or official regulations, or by an act of compliance with UN Security Council resolution, in accordance with ITT 2.1*	*Must meet requirement*	*JVCA must meet requirement*	*Must meet requirement*	*N/A*	*Application Submission Sheet & Letter of Tender*

Factor	Table 2.2 Historical Contract Non-Performance					
Sub-Factor	Criteria					Documentation Required
	Requirement	Tenderer				
		Single Entity	Joint Venture, Consortium or Association			
			All partners combined	Each partner	At least one partner	
2.2.1 History of non-performing contracts	*Non-performance of a contract did not occur within the last 5 (five) years prior to the deadline for tenders submission, based on all information on fully settled disputes or litigation. A fully settled dispute or litigation is one that has been resolved in accordance with the Dispute Resolution Mechanism under the respective contract, and where all appeal instances available to the Tenderer have been exhausted.*	*Must meet requirement by itself or as partner to past or existing JVCA*	*N / A*	*Must meet requirement by itself or as partner to past or existing JVCA*	*N / A*	*Form CON - 2*
2.2.2 Pending Litigation	*All pending litigation shall in total not represent more than 20 percent (20 %) of the Tenderer's net worth and shall be treated as resolved against the Tenderer.*	*Must meet requirement by itself or as partner to past or existing JVCA*	*N / A*	*Must meet requirement by itself or as partner to past or existing JVCA*	*N / A*	*Form CON - 2*

Factor	Table 2.3 Financial Situation					
Sub-factor	Criteria					Documentation required
	Requirement	Tenderer				
		Single Entity	Joint Venture, Consortium, Association			
			All partners combined	Each Partner	At least one partner	
2.3.1. Historical Financial Performance	*Submission of audited balance sheets or if not required by the law of the Tenderer's country, other financial statements acceptable to the Employer, for the last 3 (three) years to demonstrate the current soundness of the Tenderers financial position and its prospective long term profitability.* ***Criterion:** The annual operating profit of the Tenderer (in case of a JVCA of Each Partner) must be positive (including all administrative and financial expenditure as well as depreciation according to plan, but excluding extraordinary expenditure and income as well as taxes) for at least 2 (two) of the previous 3 (three) financial years.*	*Must meet requirement*	*N/A*	*Must meet requirement*	*N/A*	*Form FIN - 1 with attachments*

2.3.2. Average Annual Construction Turnover	*Minimum average annual turnover of the Tenderer of **2,000,000.00 (two million) EURO**, calculated as total certified payments received for contracts in progress or completed, within the last 3 (three) financial years.*	*Must meet requirement*	*Must meet requirement*	*N/A*	*N/A*	*Form FIN - 2*
2.3.3. Financial Resources	*The Tenderer must demonstrate access to, or availability of, financial resources such as liquid assets, unencumbered real assets, lines of credit, and other financial means, to meet:* *i) the following cash-flow requirement: **500,000.00 (five hundred thousand) EURO** and* *ii) the overall cash flow requirements for this contract and its current commitments.*	*Must meet requirement*	*Must meet requirement*	*Must meet at least 15 % of the requirement*	*Must meet at least 40 % of the requirement*	*Form FIN - 3* *Form FIN - 4*

206

Factor	Table 2.4 Experience					
	Criteria					
Sub-Factor	Requirement	Tenderer				Documentation Required
		Single Entity	Joint Venture, Consortium or Association			
			All partners combined	Each partner	At least one partner	
2.4.1. General Experience	*Experience under contracts in the role of contractor or prime contractor for the last 5 (five) years prior to the tender submission deadline.*	*Must meet requirement*	*N/A*	*Must meet requirement*	*N/A*	*Form EXP - 1*
2.4.2. Specific Experience	*Participation as prime contractor in the execution of at least 1 (one) project of design and execution of construction of sewerage of a nature and complexity comparable to the proposed contract that have been successfully and substantially completed within the last 5 (five) years prior to the tender submission deadline, each with a value of at least **1,500,000.00 EURO** (excluding VAT).* *The similarity shall be based on the physical size, complexity, methods/technology or other characteristics.* *The Tenderer must demonstrate that works and supplies have been done directly by him in position of prime contractor or Leading Partner of JVCA.* *The Tenderer must submit Taking Over Certificates or other documents of contractual relevance with clear evidence of (as a minimum) the name of contract, name of prime contractor, construction period, taking over date and final contract price.*	*Must meet requirement*	*Must meet requirement*	*N/A*	*N/A*	*Form EXP - 2*

Table 2.5 Contractor's Personnel

Factor	Criteria						Documentation required
Sub-factor	Requirements		Tenderer				
			Single Entity	Joint Venture, Consortium, Association			
	Total Works Experience (years)	Similar Works Experience (years)		Leading Partner	Each Partner	All partners combined	
Contractor's Representative *The proposed person shall be an employee of the Tenderer*	*10*	*5*	*Must meet requirement*	*N/A*	*N/A*	*Must meet requirement*	*As per Tender Data, Para 3.2, Clause 3.2.5*
Site Manager *The proposed Site Manager shall be employee of the Tenderer and shall bear with Montenegrin or any other Eligible country licences to perform engineering works*	*5*	*3*	*Must meet requirement*	*N/A*	*N/A*	*Must meet requirement*	*As per Tender Data, Para 3.2, Clause 3.2.5*
Land Surveyor *The proposed person shall bear with a Montenegrin or any other Eligible country licence to perform land surveying*	*5*	*3*	*Must meet requirement*	*N/A*	*N/A*	*Must meet requirement*	*As per Tender Data, Para 3.2, Clause 3.2.5*
Construction Engineer *The proposed person shall bear with a Montenegrin or any other Eligible country licence in the subject of the Tender*	*5*	*3*	*Must meet requirement*	*N/A*	*N/A*	*Must meet requirement*	*As per Tender Data, Para 3.2, Clause 3.2.5*

307

STRABAG

Electrical Engineer *The proposed person shall bear with a Montenegrin or any other Eligible country licence in the subject of the Tender*	*5*	*3*	*Must meet requirement*	*N/A*	*N/A*	*Must meet requirement*	*As per Tender Data, Para 3.2, Clause 3.2.5*
Miner *The proposed person shall bear with a Montenegrin or any other Eligible country licence in the subject of the Tender*	*5*	*3*	*Must meet requirement*	*N/A*	*N/A*	*Must meet requirement*	*As per Tender Data, Para 3.2, Clause 3.2.5*
Process Designer of Water Supply / FS *The proposed Designer shall bear with a Montenegrin or any other Eligible country licence in the subject of the Tender*	*5*	*3*	*Must meet requirement*	*N/A*	*N/A*	*Must meet requirement*	*As per Tender Data, Para 3.2, Clause 3.2.5*

208

Factor	Table 2.6 Contractor's equipment					
	Criteria					
Sub-Factor	Requirement	Tenderer				Documentation Required
		Single Entity	Joint Venture, Consortium or Association			
			All partners combined	Each partner	At least one partner	
Excavators	*Minimum Number required 3*	*Must meet requirement*	*Must meet requirement*	*N/A*	*N/A*	*As per Tender Data, Para 3.2., Clause 3.2.6.*
Transport vehicles	*Minimum Number required 5*	*Must meet requirement*	*Must meet requirement*	*N/A*	*N/A*	*As per Tender Data, Para 3.2., Clause 3.2.6.*
Vibratory plate	*Minimum Number required 5*	*Must meet requirement*	*Must meet requirement*	*N/A*	*N/A*	*As per Tender Data, Para 3.2., Clause 3.2.6.*
Trench sheeting	*Minimum Number required 5*	*Must meet requirement*	*Must meet requirement*	*N/A*	*N/A*	*As per Tender Data, Para 3.2., Clause 3.2.6.*